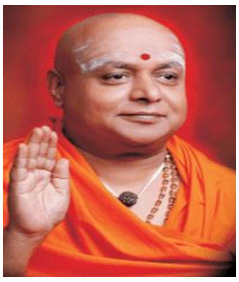

|| Jai Sri Gurudev ||

“SRI ADICHUNCAHANAGIRI SHIKSHANA TRUST {REGD.}”

Sri Balagangadharanatha Swamiji Institute of Technology

Bellur Cross, Nagamangala Taluk, Mandya District, Karnataka

LABORATORY MANUAL

GEOTECHNICAL ENGINEERING LABORATORY

(As per V.T.U Syllabus)

Prepared By

SUNIL R

B.E. M.Tech

ASSISTANT PROFESSOR

DEPARTMENT OF CIVIL ENGINEERING

B.G.S.I.T, B.G. NAGAR

GEOTECHNICAL ENGINEERING
LAB MANUAL

R. SUNIL

B.E. (CIVIL), M.Tech (CONSTRUCTION TECHNOLOGY)

ASSISTANT PROFESSOR

B.G.S. INSTITUTE OF TECHNOLOGY, B.G. NAGAR

<u>TO MY PARENTS</u>

<u>&</u>

<u>B.G.S.I.T COLLEGE</u>

CONTENTS:

INTRODUCTION

Soil and Soil Engineering:

The term **"Soil"** has various meanings in different scientific fields. It has originated from the Latin word ***Solum***. Soil may remain at the place of its origin (or) it may be transported by various natural agencies. It is said to be 'residual' in the earlier situation and 'transported' in the latter. ***Soil can be defined in three ways*:**

To an agriculturist, "Soil is the substance existing on the earth's surface, which grows and develops plant life**"**.

To a geologist, "It means the disintegrated rock material which has not been transported from the place of origin**"**.

To a civil engineer, "The loose unconsolidated inorganic material on the earth's crust produced by the disintegration of rocks, overlaying hard rock's with (or) without organic matter**"**. It includes different materials like boulders, sands, gravels, clay and silts.

"Karl Von Terzaghi {1883-1963} has often been called as the "Father of Geo-tech (or) Soil Mechanics (or) Modern Soil Mechanics".

Soil is a complex material produced by the weathering of the solid rock. The formation of soil is as a result of the geologic cycle continually taking place on the face of the earth. The cycle consists of weathering, transportation, deposition, again followed by weathering, and so on. Weathering is caused by the physical agencies such as periodical temperature changes, impact and splitting action of flowing water, ice and wind, splitting action of ice, plants and animals. Chemical weathering may be caused due to oxidation, hydration, carbonation and leaching by organic acids and water. It is to be noted that 95% of the earth's crust consists of igneous rocks, and only the remaining 5% consists of sedimentary and metamorphic rocks. However, sedimentary rocks are present on 80% of the earth's surface area. Leaching is the process whereby water-soluble parts in the soil such as Calcium Carbonate, are dissolved and washed out from the soil by rainfall (or) percolating subsurface water.

Fields of Application of Soil Mechanics:

- Foundation design and construction.
- Pavement design.
- Design of underground structures and earth retaining structures.
- Design of embankments and excavations.
- Design of earth dams.

Commonly used soils:

Sand and Gravel, Inorganic Silt, Organic Silt, Clay, Bentonite, Varved Clays, Kaolin, China Clay, Boulders Clay, Caleareous Soil, Marl, Hardpan, Caliche, Peat, Loam, Loess, Shale, Black Cotton Soil, Laterite and Moorum.

Major Soil Deposits of India:

1. Black cotton soils, occurring in Maharashtra, Gujarat, Madhya Pradesh, Karnataka, parts of Andhra Pradesh and Tamil Nadu.
2. Marine soils, occurring in a narrow belt all along the coast, especially in the Rann of Kutch.
3. Desert soils, occurring in Rajasthan.
4. Alluvial soils, occurring in the Indo-Gangetic plain, north of the Vindhyachal ranges.
5. Lateral soils, occurring in Kerala, South Maharashtra, Karnataka, Orissa and West Bengal.

SI Units:

Density is expressed in terms of ***“g/cm^3”*** (or) ***“kN/m^3”*** . In order to convert density into unit weight, multiply the former by **“9.81 (or) 10 kN/m^3”**.

For example:

Density = Mass/Volume = 216/120 = 1.8 g/cm^3.

Unit Weight = Weight/Volume x 9.81 or 10 = 216/120 x 9.81 or 10 = 17.66 kN/m^3.

Soil Three Phase System:

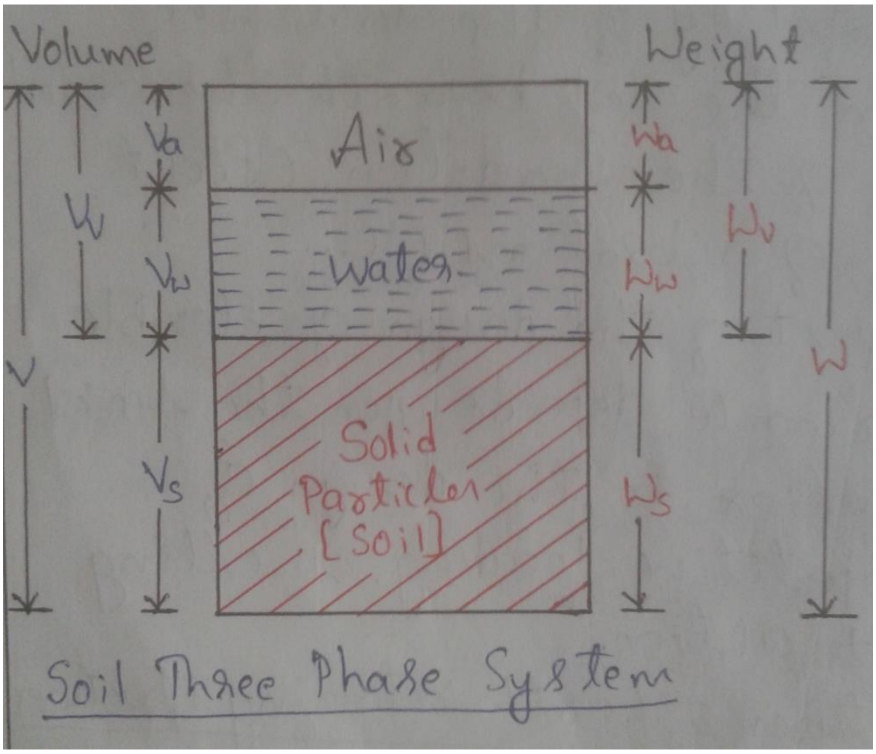

Where, V_a= Volume of air

V_w= Volume of water

V_s= Volume of solids

V_v= Volume of voids

V= Total volume = $V_a + V_w + V_s$

W_a= Weight of air

W_w= Weight of water

W_s= Weight of solids

W_v= Weight of materials

W= Total weight = $W_a + W_w + W_s$

EXPERIMENT NO. 1

Specific Gravity Test

Object: To determine the specific gravity of the soil fraction passing 4.75 mm IS sieve using pycnometer.

Apparatus: Pycnometer, 4.75 mm IS Sieve, Balance, Oven, Desiccator, Glass rod, Distilled water, Thermometer.

Theory: The specific gravity of solids is frequently required for computation of several quantities such as void ratio, degree of saturation, unit weight of solids and unit weight of soil in various states. The specific gravity of soil solids is determined by:

(i) a 50ml density bottle.
(ii) a 500ml flask.
(iii) a 500ml pycnometer.

Specific Gravity is defined as “the ratio of the unit weight of soil solids to the unit weight of water at the standard temperature of 4^oC”.

Specific Gravity Values for:

Soil Type	**Specific Gravity**
Coarse Grained Soil	2.60-2.70
Fine Grained Soil	2.70-2.80
Organic Soil	2.30-2.50
Quartz Sand	2.64-2.65
Silt	2.68-2.72
Silt with organic matter	2.40-2.50
Clay	2.44-2.92
Bentonite	2.34
Loess	2.65-2.75
Lime	2.70

Applications:

Specific gravity of soil grains is an important property and is used in calculating void ratio, porosity and degree of saturation. Its value helps upto some extent in identification and classification of soils. It gives an idea about the suitability of the soil as a construction material, higher value of specific gravity gives more strength for roads and foundations. It is used in computing the soil particle size by means of hydrometer analysis. It is also used in estimating the critical hydraulic gradient in soil when sand boiling condition is being studied and in zero air void calculations in the compaction theory of soils.

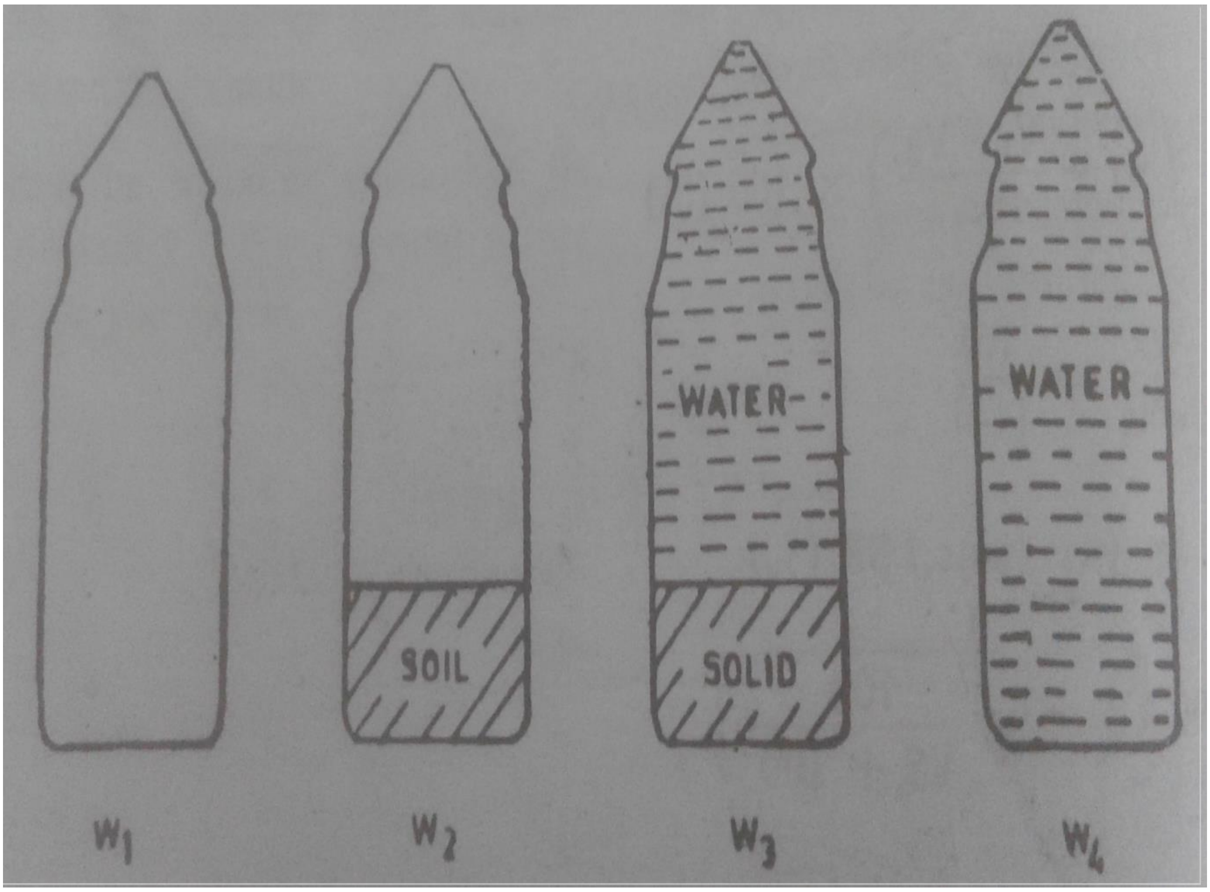

Fig 1.1 Specific Gravity Determination by Pycnometer

W_1= Weight of empty pycnometer.

W_2= Weight of pycnometer + Soil.

W_3= Weight of pycnometer + Soil + Water.

W_4= Weight of pycnometer + Water.

Procedure:

1. Soil is sieved through 4.75 mm IS Sieve and collect the sample.
2. Weigh about 250g of sieved soil.
3. Clean the pycnometer and dry it.
4. After drying, screw the cap of pycnometer and note down the mass of empty pycnometer as W_1g.
5. Pour the 250g of soil into the pycnometer and note down the mass of pycnometer along with the soil as W_2g.
6. Fill the pycnometer to half its height with distilled water and mix it thoroughly with glass rod to remove the entrapped air.
7. After removal of entrapped air again fill the pycnometer completely with distilled water and note down the mass of pycnometer along with soil and water as W_3g.
8. Empty the pycnometer and clean it thoroughly.
9. Again fill the pycnometer with distilled water to the hole of the conical cap and note down the mass of pycnometer along with water as W_4g.
10. Repeat the test procedure for two more samples.

Tabular Column:

Sl No.	Determination No.	Trail 1	Trail 2	Trail 3
1	Pycnometer Bottle No.			
2	Mass of empty pycnometer, W_1g			
3	Mass of pycnometer + Soil, W_2g			
4	Mass of pycnometer + Soil + Water, W_3g			
5	Mass of pycnometer + Water, W_4g			
6	Specific Gravity of Soil at T °C, G_s			
7	Specific Gravity of Soil at 27 °C, G_{27}			
8	Average Specific Gravity at 27 °C, G_{27}			

Calculations:

Specific Gravity of Soil at T ^{o}C, $G_s = \frac{(W2-W1)}{(W2-W1)-(W3-W4)}$

Result:

Specific Gravity of Soil at 27 °C, G_{27} =

EXPERIMENT NO. 2

Specific Gravity Test

Object: To determine the specific gravity of the soil fraction passing 425 micron IS sieve using density bottle.

Apparatus: Density Bottle, 425 micron IS Sieve, Balance, Oven, Desiccator, Distilled water, Thermometer.

Theory: The specific gravity of solids is frequently required for computation of several quantities such as void ratio, degree of saturation, unit weight of solids and unit weight of soil in various states. The specific gravity of soil solids is determined by:

(i) a 50ml density bottle.
(ii) a 500ml flask.
(iii) a 500ml pycnometer. The density bottle method is the standard method used in laboratory.

Specific Gravity is defined as “the ratio of the unit weight of soil solids to the unit weight of water at the standard temperature of 4^{o}C”.

Specific Gravity Values for:

Soil Type	**Specific Gravity**
Coarse Grained Soil	2.60-2.70
Fine Grained Soil	2.70-2.80
Organic Soil	2.30-2.50
Quartz Sand	2.64-2.65
Silt	2.68-2.72
Silt with organic matter	2.40-2.50
Clay	2.44-2.92
Bentonite	2.34
Loess	2.65-2.75

Applications:

Specific gravity of soil grains is an important property and is used in calculating void ratio, porosity and degree of saturation. Its value helps upto some extent in identification and classification of soils. It gives an idea about the suitability of the soil as a construction material, higher value of specific gravity gives more strength for roads and foundations. It is used in computing the soil particle size by means of hydrometer analysis. It is also used in estimating the critical hydraulic gradient in soil when sand boiling condition is being studied and in zero air void calculations in the compaction theory of soils.

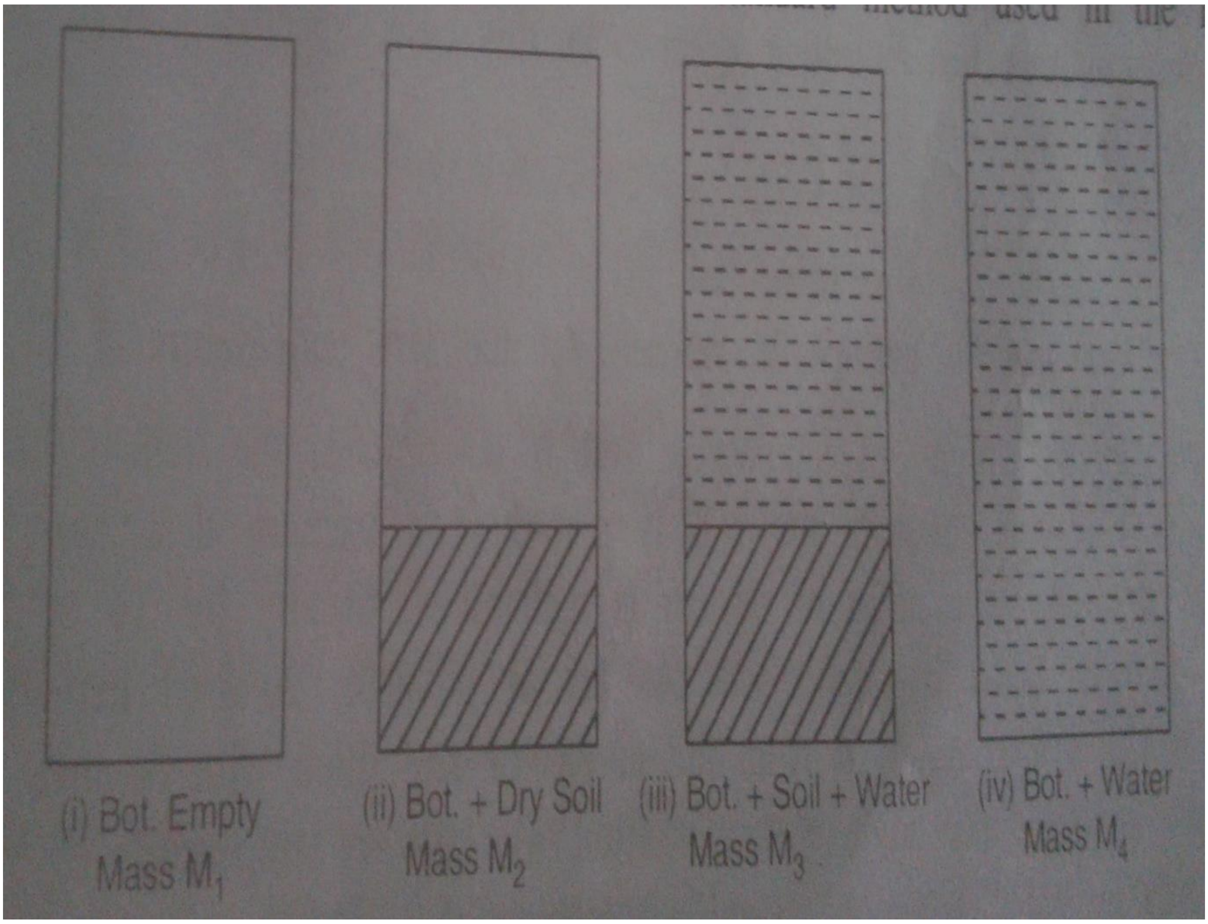

Fig 2.1 Specific Gravity Determination by Density Bottle

M_1= Weight of empty density bottle.

M_2= Weight of density bottle + Soil.

M_3= Weight of density bottle + Soil + Water.

M_4= Weight of density bottle + Water.

Procedure:

1. Soil is sieved through 425 micron IS Sieve and collect the sample.
2. Weigh about 20g of sieved soil.
3. Clean the density bottle and dry it.
4. After drying, put the stopper and note down the mass of empty density bottle as M_1g.
5. Pour the 20g of soil into the density bottle and note down the mass of density bottle along with the soil as M_2g.
6. Put 10ml of distilled water in the bottle, so that the soil is fully soaked. Leave it for a period of 2 hours.
7. Add more water so that the bottle is about half full and shake bottle to remove the entrapped air.
8. Fill the water completely into the bottle and put the stopper. Keep it in a water bath for about 1 hour so that the temperature of soil and water in the bottle reaches 27 °C.
9. Note down the mass of density bottle along with soil and water as M_3g.
10. Empty the density bottle and clean it thoroughly.
11. Again fill the density bottle with distilled water, put on the stopper and note down the mass of density bottle along with water as M_4g.
12. Repeat the test procedure for two more samples.

Tabular Column:

Sl No.	Determination No.		Trail 1	Trail 2	Trail 3
1	Density Bottle No.				
2	Mass of empty density bottle,	M_1g			
3	Mass of density bottle + Soil,	M_2g			
4	Mass of density bottle + Soil + Water,	M_3g			
5	Mass of density bottle + Water,	M_4g			
6	Specific Gravity of Soil at T °C,	G_s			
7	Specific Gravity of Soil at 27 °C,	G_{27}			
8	Average Specific Gravity at 27 °C,	G_{27}			

Calculations:

Specific Gravity of Soil at T ^{o}C, $G_s = \frac{(M2-M1)}{(M2-M1)-(M3-M4)}$

Result:

Specific Gravity of Soil at 27 °C, G_{27} =

EXPERIMENT NO. 3

Water Content Determination

Object: To determine the water content of a soil sample by oven-drying method.

Apparatus: Non corrodible air-tight containers, Balance, Desiccator, Oven, Distilled water Tongs.

Theory: A soil is an aggregate of soil particles having porous structures. The pores may have water and air. The pores are also known as voids. If voids are fully filled with water, the soil is called as saturated soil. The water content of a soil can be determined by the following methods:

(i) Oven-drying method.
(ii) Pycnometer method.
(iii) Sand-bath method.
(iv) Rapid moisture meter method (or) Calcium carbide method.
(v) Torsion balance moisture meter method.
(vi) Radiation method.
(vii) Alcohol method.

Water Content is defined as “the ratio of the weight of water to the weight of solids of the soil mass”. The following quantities are recommended for laboratory use:

Size of particles more than 90% passing	Minimum quantity of soil specimen to be taken for testing (g)
425 micron IS sieve	25
2 mm IS sieve	50
4.75 mm IS sieve	200
9.5 mm IS sieve	300
19 mm IS sieve	500
37.5 mm IS sieve	1000

Applications:

Moisture content plays an important role in understanding the behaviour of fine grained soils. It is the moisture content which changes the soils from liquid state to plastic and solid states. Its value controls the shear strength and compressibility of soils. Compaction of soils in the field is also controlled by the quantity of water present. Densities of soils are directly influenced by its value and are used in calculating the stability of slopes etc........

Procedure:

1. Clean the non corrodible metal container with lid.
2. Note down the empty mass of metal container along with lid as M_1g.
3. Put the required quantity of the moist soil sample in the container and replace the lid and note down the mass of container along with soil and lid as M_2g.
4. Remove the lid from the container and placed the moist soil sample along with container in a thermostatically controlled oven for 24 hours at a temperature of 110°C.
5. After 24 hours take out the container, replace the lid and cool it in the desiccator for about 1 hour.
6. Note down the mass of the container along with the lid and dry soil as M_3g.
7. Repeat the procedure for two more samples.

Observation:

Test Temperature, T °C =

Tabular Column:

Sl No.	Determination No.	Trail 1	Trail 2	Trail 3
1	Container No.			
2	Mass of empty metal container with lid, M_1g			
3	Mass of container + Wet soil, M_2g			
4	Mass of container + Dry soil, M_3g			
5	Mass of water, $M_4 = (M_2 - M_3)$g			
6	Mass of dry soil, $M_5 = (M_3 - M_1)$g			
7	Water Content, $w = \frac{(M2-M3)}{(M3-M1)}$ x 100%			
8	Average Water Content, w%			

Calculations:

Water Content, $w = \frac{(M2-M3)}{(M3-M1)} \text{ x } 100\%$ (or) $\frac{M4}{M5} \text{ x } 100\%$

Result:

Water Content of given soil sample, w (%) =

EXPERIMENT NO. 4

Grain Size Analysis - Mechanical Method

Object: To determine the grain size distribution of soil sample by sieving.

Apparatus: Set of IS sieves 4.75 mm, 2.36 mm, 1.18 mm, 600 micron, 425 micron, 300 micron, 212 micron, 150 micron, 75 micron and pan, Balance, Oven.

Theory: Sieve analysis consists of shaking the soil sample through a set of sieves that have progressively smaller openings. The sieves used for soil analysis are generally 203 mm in diameter. The complete sieve analysis can be divided into two parts – the coarse analysis and the fine analysis. An oven dried soil sample is separated into two fractions by sieving it through a 4.75 mm IS sieve. The portion retained on 4.75 mm sieve is termed as gravel (or) coarse fraction and is kept for the coarse analysis. While the portion passing through the 4.75 mm sieve is subjected to fine sieve analysis. Sieve analysis is mainly used to find the percentage of various size particles in a given soil. The knowledge of grain size analysis is very useful in the present geotechnical world. The results of this analysis are widely used for soil classification, design of filters, construction of earth dams, highway embankments, hydraulic structures and road construction. Grain size analysis is generally carried out by two methods:

(i) Dry Sieving Analysis.
(ii) Wet Sieving Analysis.

Applications:

The percentage of different sizes of soil particles coarser than 75 micron is determined. The grain size distribution curve gives an idea regarding the gradations of the soil that is it is possible to identify whether a soil is well graded (or) poorly graded. In mechanical soil stabilization, the main principle is to mix a few selected soils in such a proportion that a desired grain size distribution is obtained for the design mix.

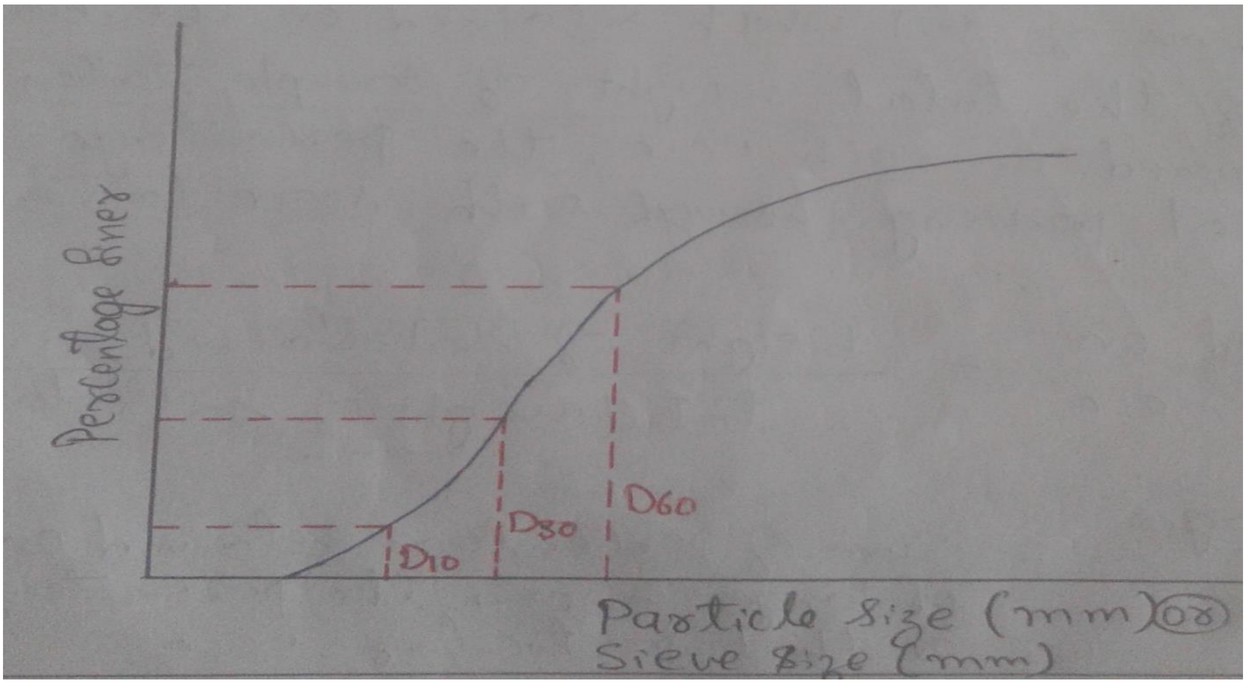

Fig 4.1 Grain Size Distribution curve

D_{10}= Diameter of particles corresponding to 10% finer.

D_{30}= Diameter of particles corresponding to 30% finer.

D_{60}= Diameter of particles corresponding to 60% finer.

Procedure:

1. Clean the set of sieves and pan with brush.
2. Take 1000g of oven dry soil sample.
3. Arrange the set of sieves in the order of 4.75 mm-2.36 mm-1.18 mm-600 micron-425 micron-300 micron-212 micron-150 micron-75 micron and pan.
4. Take the empty weight of the each sieve.
5. Place these set of sieves in a mechanical sieve shaker.
6. Pour the soil sample into the set of sieves and switch on the mechanical sieve shaker.
7. After 10 minutes switch off the shaker and take out the sieve set outside.
8. Note down the mass of soil retained on the each sieves.
9. Using semi log sheet draw the graph in order to get the “S” curve, which is used to determine the diameter of particles corresponding to 10%, 30% and 60% finer.

Observation:

Mass of Soil Taken =

Tabular Column:

Sieve No.	Weight of empty sieve	Weight of sieve+soil	Weight of soil retained	Percentage weight retained	Cumulative percentage retained	Percentage finer
4.75 mm						
2.36 mm						
1.18 mm						
600 µ						
425 µ						
300 µ						
212 µ						
150 µ						
75 µ						
pan						

Note:

1. Percentage weight retained = $\frac{\text{Weight of soil retained on that sieve}}{\text{Total weight of soil taken}} X\ 100\%$
2. Cumulative percentage retained = Sum of percentage retained on all sieves of larger sizes and the percentage retained on that sieve.
3. Percentage finer = 100% - Cumulative percentage retained.

Calculations:

Uniformity Co-efficient, $C_u = \frac{D60}{D10}$

Co-efficient of Curvature, $C_c = \frac{D30\ X\ D30}{D60\ X\ D10}$

Result:

Uniformity Co-efficient, C_u =

Co-efficient of Curvature, C_c =

EXPERIMENT NO. 5

In-Place Density Test

Object: To determine the wet density, dry density, voids ratio and degree of saturation of soil in-place by core cutter.

Apparatus: Cylindrical Core Cutter, Steel rammer, Steel dolly, Balance, Steel scale, Knife, Oven, Non corrodible air-tight containers, Desiccators, Tongs.

Theory: The field density of a natural soil deposit can be determined by the following methods:

(i) Core cutter method.
(ii) Sand replacement method.
(iii) Water displacement method.
(iv) Rubber balloon method.

Density is defined as “the mass of the soil per unit volume”. Density is expressed in terms of g/cm^3 (or) kg/m^3 (or) kN/m^3. In soils the mass of air is considered negligible and therefore the saturated density is maximum, dry density is minimum and wet density is in between the two.

Applications:

Density is used in calculating the stress in the soil due to its overburden pressure. It is needed in estimating the bearing capacity of soil foundation system, settlement of footings, earth pressure behind the retaining wall, dams, embankments and cutsis checked with the help of density of those soils. It is the density which controls the field compaction of soils. Permeability of soils depends on the density. Relative density of cohesionless soils is determined by knowing the dry density of that soil in natural, loosest and densest states. Void ratio, porosity and degree of saturation need the help of density of soils.

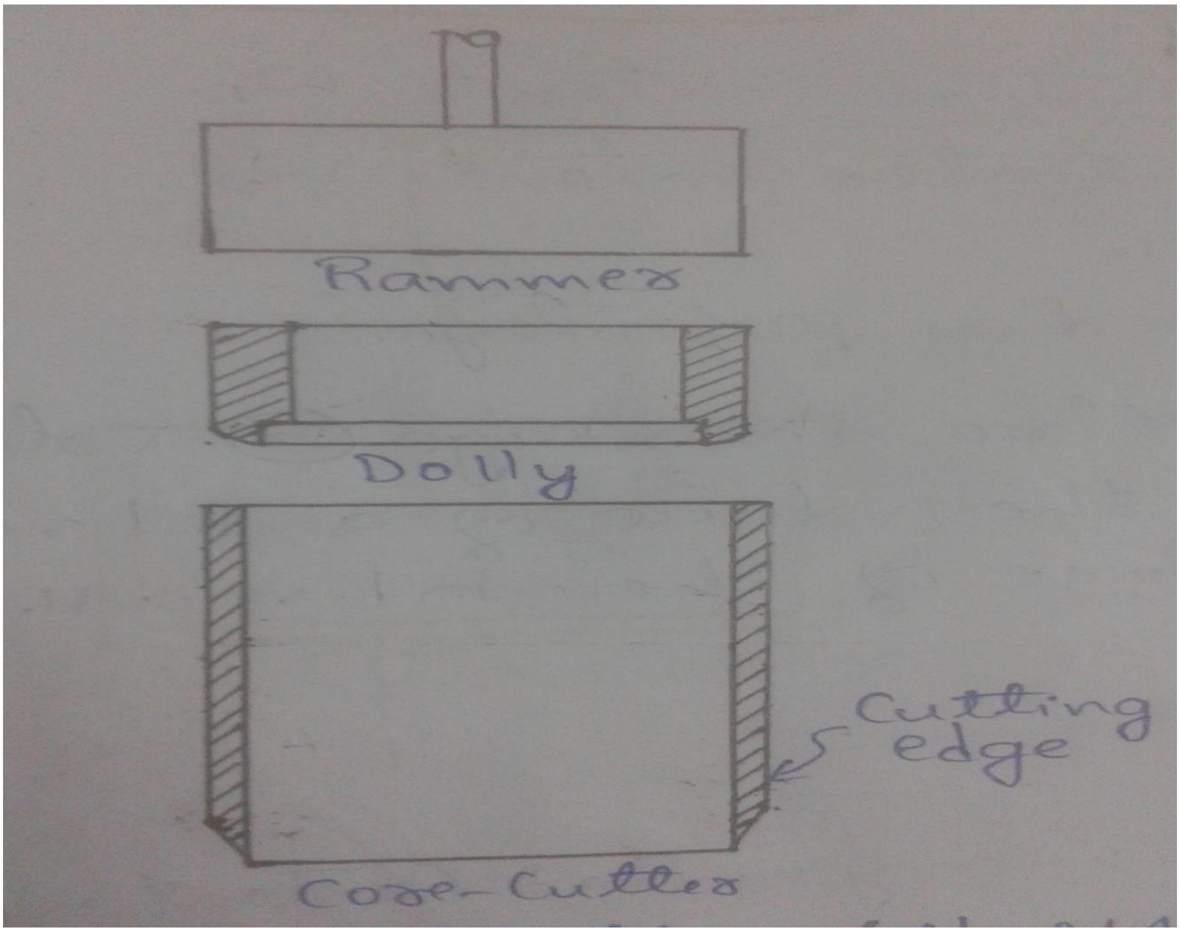

Fig 5.1 In-Place Density Determination by Core Cutter

Procedure:

1. Measure the height and diameter of the core cutter and calculate its area and volume.
2. Note down the mass of empty core cutter as M_1g.
3. Clean and level the place where density is to be determined.
4. Place the core cutter along with dolly on the soil surface and using the steel rammer push the core cutter inside the soil.
5. Remove the soil round the cutter by the spade.
6. Lift the core cutter carefully and trim off the top and bottom surface of core cutter with knife to level the surface.
7. Clean the outside surface of the core cutter and note down the mass of core cutter along the soil as M_2g.
8. Remove the soil from the core cutter and take representative sample in the crucibles for water content determination.
9. Repeat the procedure for two more samples.

Observation:

Internal diameter of core cutter, D (cm) =

Internal height of core cutter, H (cm) =

Cross-sectional area of core cutter, A (cm^2) = $\frac{\pi \text{ x D x D}}{4}$

Volume of core cutter, V (cm^3) = A x H =

Specific Gravity of Soil, G =

[measured (or) given (or) assumed]

Tabular Column:

Sl No.	Determination No.	Trail 1	Trail 2	Trail 3
1	Mass of empty core cutter, M_1g			
2	Mass of core cutter + Soil, M_2g			
3	Mass of soil, $M_s = (M_2-M_1)$g			
4	Container No.			
5	Mass of empty metal container with lid, W_1g			
6	Mass of container + Wet soil, W_2g			
7	Mass of container + Dry soil, W_3g			
8	Mass of water, $W_4 = (W_2-W_3)$g			
9	Mass of dry soil, $W_5 = (W_3-W_1)$g			
10	Water Content, $w = \frac{(W2-W3)}{(W3-W1)}$ x 100%			
11	Wet Density, γ g/cm^3			
12	Dry Density, γ_d g/cm^3			
13	Voids Ratio, e			
14	Degree of Saturation, S%			

Calculations:

Wet Density, $\gamma\ (g/cm^3) = \frac{(M2-M1)}{V}$

Dry Density, $\gamma_d\ (g/cm^3) = \frac{\gamma}{1+w}$

Voids Ratio, $e = [(G \times \gamma_w) / \gamma_d] - 1$

Degree of Saturation, $S = \frac{G \text{ x } w}{e} X100\%$

Result:

Wet Density, γ (g/cm^3) =

Dry Density, γ_d (g/cm^3) =

Voids Ratio, e =

Degree of Saturation, $S\%$ =

Note: Here “w = water content” and it should be put in decimals. $\gamma_{w} = 1$ g/cm^3 or 9.81 kN/m^3

EXPERIMENT NO. 6

In-Place Density Test

Object: To determine the bulk density, wet density, dry density, voids ratio and degree of saturation of soil in-place by sand replacement method.

Apparatus: Sand pouring cylinder, Cylindrical calibrating container, Trowel, Metal tray with hole, 600 micron sieve, Sand, Balance, Oven, Non corrodible air-tight containers, Desiccator, Glass plate, Tongs.

Theory: The field density of a natural soil deposit can be determined by the following methods:

(i) Core cutter method.
(ii) Sand replacement method.
(iii) Water displacement method.
(iv) Rubber balloon method.

Density is defined as “the mass of the soil per unit volume”. Density is expressed in terms of g/cm^3 (or) kg/m^3 (or) kN/m^3. Sand replacement method is also used to find the density of soil next to core cutter method.

Applications:

Density is used in calculating the stress in the soil due to its overburden pressure. It is needed in estimating the bearing capacity of soil foundation system, settlement of footings, earth pressure behind the retaining wall, dams, embankments and cutsis checked with the help of density of those soils. It is the density which controls the field compaction of soils. Permeability of soils depends on the density. Relative density of cohesionless soils is determined by knowing the dry density of that soil in natural, loosest and densest states. Void ratio, porosity and degree of saturation need the help of density of soils.

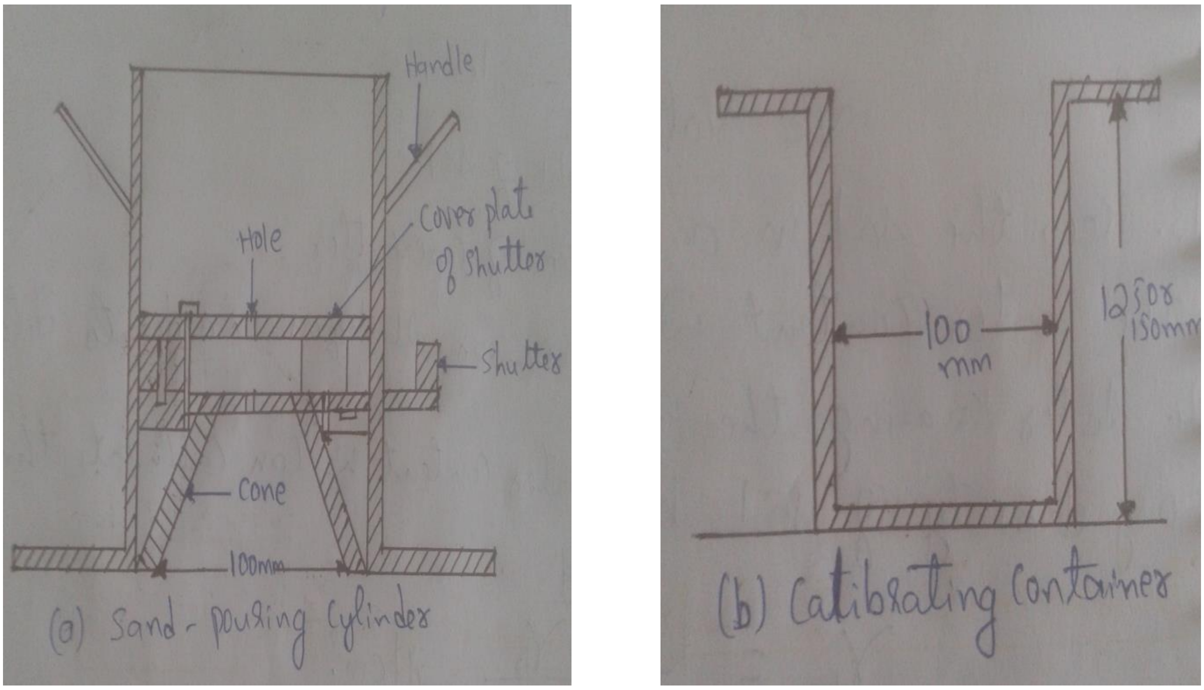

Fig 6.1 In-Place Density Determination by Sand Replacement Method

Procedure:

a. Determination of density of sand:
   1. First sieve the sand using 600 micron and collect the sample which is passed from the sieve.
   2. Measure the height and diameter of the calibrating container and calculate its area and volume.
   3. Fill the pouring cylinder with sand within about 1 cm of the top.
   4. Note down the mass of pouring cylinder along with sand as M_1g.
   5. Place the pouring cylinder concentrically on the top of the calibrating container.
   6. Open the shutter to allow the sand to run out into the calibrating container.
   7. When there is no further movement of sand in the pouring cylinder, close the shutter.
   8. Note down the mass of pouring cylinder along with sand after pouring to the calibrating container as M_2g.
   9. Place the pouring cylinder on plane surface i.e glass plate and open the shutter.
   10. When there is no further movement of sand in the pouring cylinder, close the shutter.

11. Note down the mass of pouring cylinder along with sand after pouring on glass plate as M_3g.

b. Determination of density of soil and water content:

1. Clean and level the ground where the field density is required.
2. Place the metal tray with central hole over the portion of soil to be tested.
3. Excavate the soil upto a depth of 15 cm through that hole.
4. Collect the excavated soil in the metal tray and note down the mass of soil as W_9g.
5. Determine the water content of the excavated soil.
6. Fill the pouring cylinder with sand within about 1 cm of the top.
7. Note down the mass of pouring cylinder along with sand as W_1g.
8. Place the pouring cylinder over the hole and open the shutter.
9. When there is no movement of sand, close the shutter.
10. Note down the mass of pouring cylinder along the sand after pouring into the hole as W_2g.
11. Place the pouring cylinder on plane surface i.e glass plate and open the shutter.
12. When there is no further movement of sand in the pouring cylinder, close the shutter.
13. Note down the mass of pouring cylinder along with sand after pouring on glass plate as W_3g.

Observation:

Internal diameter of calibrating container, D (cm) =

Internal height of calibrating container, H (cm) =

Cross-sectional area of calibrating container, A (cm^2) = $\frac{\pi \text{ x D x D}}{4}$

Volume of calibrating container, V (cm^3) = A x H =

Specific Gravity of Soil, G =

[measured (or) given (or) assumed]

Tabular Column:

Sl No.	Determination No.	Trail 1	Trail 2
1	Mass of pouring cylinder + Sand (before pouring), M_1g		
2	Mass of pouring cylinder + Sand (after pouring), M_2g		
3	Mass of pouring cylinder + Sand (pouring on glass plate), M_3g		
4	Mass of sand for filling the calibrating cylinder and cone, $M_4 = (M_1 - M_2)$g		
5	Mass of sand for making the cone only, $M_5 = (M_2 - M_3)$g		
6	Mass of sand in the calibrating cylinder only, $M_6 = (M_4 - M_5)$g		
7	Bulk Density of sand, γ_s g/cm^3		

Calculations:

Bulk Density of sand, γ_s (g/cm^3) = $\frac{M6}{V}$

Tabular Column:

Sl No.	Determination No.		Trail 1	Trail 2
1	Mass of pouring cylinder + Sand (before pouring),	W_1g		
2	Mass of pouring cylinder + Sand (after pouring),	W_2g		
3	Mass of pouring cylinder + Sand (pouring on glass plate),	W_3g		
4	Mass of sand used in hole and cone,	$W_4 = (W_1 - W_2)$g		
5	Mass of sand in the cone only,	$W_5 = (W_2 - W_3)$g		
6	Mass of sand in the hole only,	$W_6 = (W_4 - W_5)$g		
7	Mass of empty tray,	W_7g		
8	Mass of tray + Excavated soil,	W_8g		
9	Mass of excavated soil,	$W_9 = (W_8 - W_7)$g		
10	Container No.			
11	Mass of empty metal container with lid,	M_1g		
12	Mass of container + Wet soil,	M_2g		
13	Mass of container + Dry soil,	M_3g		
14	Mass of water,	$M_4 = (M_2 - M_3)$g		
15	Mass of dry soil,	$M_5 = (M_3 - M_1)$g		
16	Water Content,	$w = \frac{(M2-M3)}{(M3-M1)} \times 100\%$		
17	Wet Density,	γ g/cm^3		
18	Dry Density,	γ_d g/cm^3		
19	Voids Ratio,	e		
20	Degree of Saturation,	S%		

Calculations:

Wet Density, γ (g/cm^3) = $\frac{W9}{W6}$ X γ_s

Dry Density, γ_d (g/cm^3) = $\frac{\gamma}{1+w}$

Voids Ratio, $e = [(G \text{ x } \gamma_w) / \gamma_d] - 1$

Degree of Saturation, $S = \frac{G \times w}{e} X100\%$

Result:

Bulk Density, γ_s (g/cm^3) =

Wet Density, γ (g/cm^3) =

Dry Density, γ_d (g/cm^3) =

Voids Ratio, e =

Degree of Saturation, S% =

Note: Here “w = water content” and it should be put in decimals. $\gamma_{w} = 1$ g/cm^3 or 9.81 kN/m^3

EXPERIMENT NO. 7

Consistency Limit Test

Object: To determine the liquid limit of the soil sample passing through 425 micron IS sieve using casagrande liquid limit method.

Apparatus: Casagrande liquid limit device, 425 micron IS sieve, Balance, Spatula, Oven, Desiccator, Non corrodible air-tight containers, Measuring jar, Distilled water, Porcelain dish.

Theory: Consistency is meant the relative easy which soil can be deformed. This term is mostly used for fine grained soils for which the consistency is related to a large extent to water content. Consistency denotes the degree of firmness of the soil which may be termed as soft, firm, stiff (or) hard. The Swedish agriculturist “Atterberg” divided the entire range from liquid to solid state into four stages:

(i) The liquid state.
(ii) The plastic state.
(iii) The semi-solid state.
(iv) The solid state.

The Atterberg limits which are most useful are liquid limit, plastic limit and shrinkage limit. These limits are expressed in terms of percentage. Liquid limit is the water content corresponding to the arbitrary limit between liquid and plastic state of consistency of a soil. Liquid limit is the water content at which soil passes from zero strength to an infinitesimal strength, hence the true value of liquid limit cannot be determined.

Liquid limit is defined as “the water content at which the soil changes from the plastic state to liquid state”.

Applications:

The values of liquid limit and plastic limit are directly used for classifying the fine grained cohesive soils according to Indian Standard on soil classification. Once the soil is classified, it helps a lot in understanding the behaviour of soil and selecting the suitable method of design, construction and maintenance of the structure made up (or) and resting on soils.

Fig 7.1 Relation between Volume of soil and its Water content

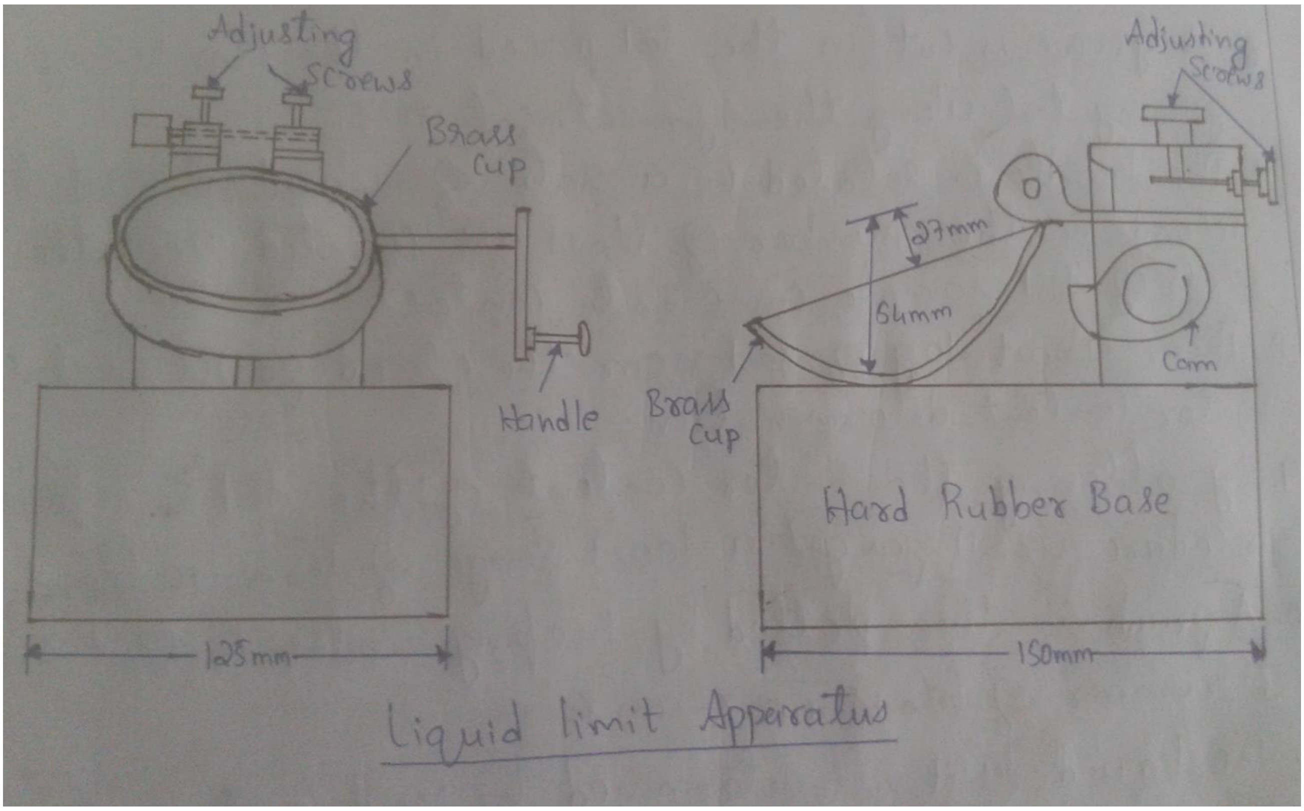

Fig 7.2 Liquid Limit Device

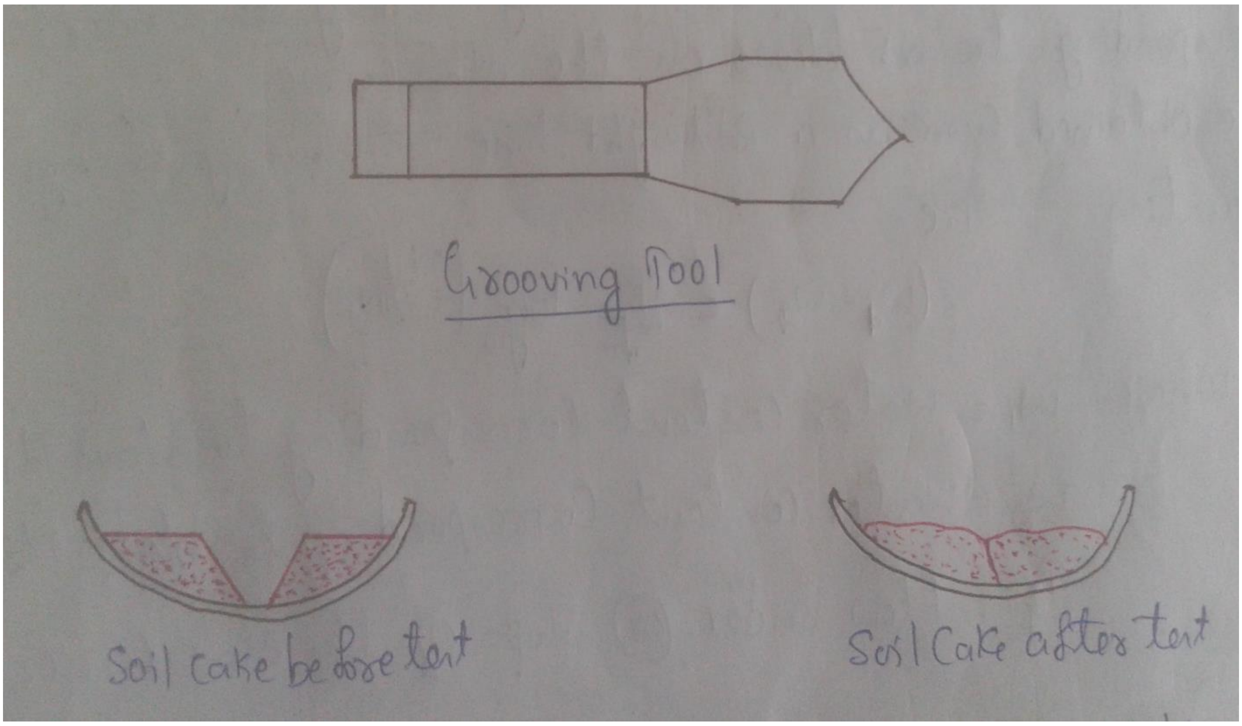

Fig 7.3 Liquid Limit Apparatus

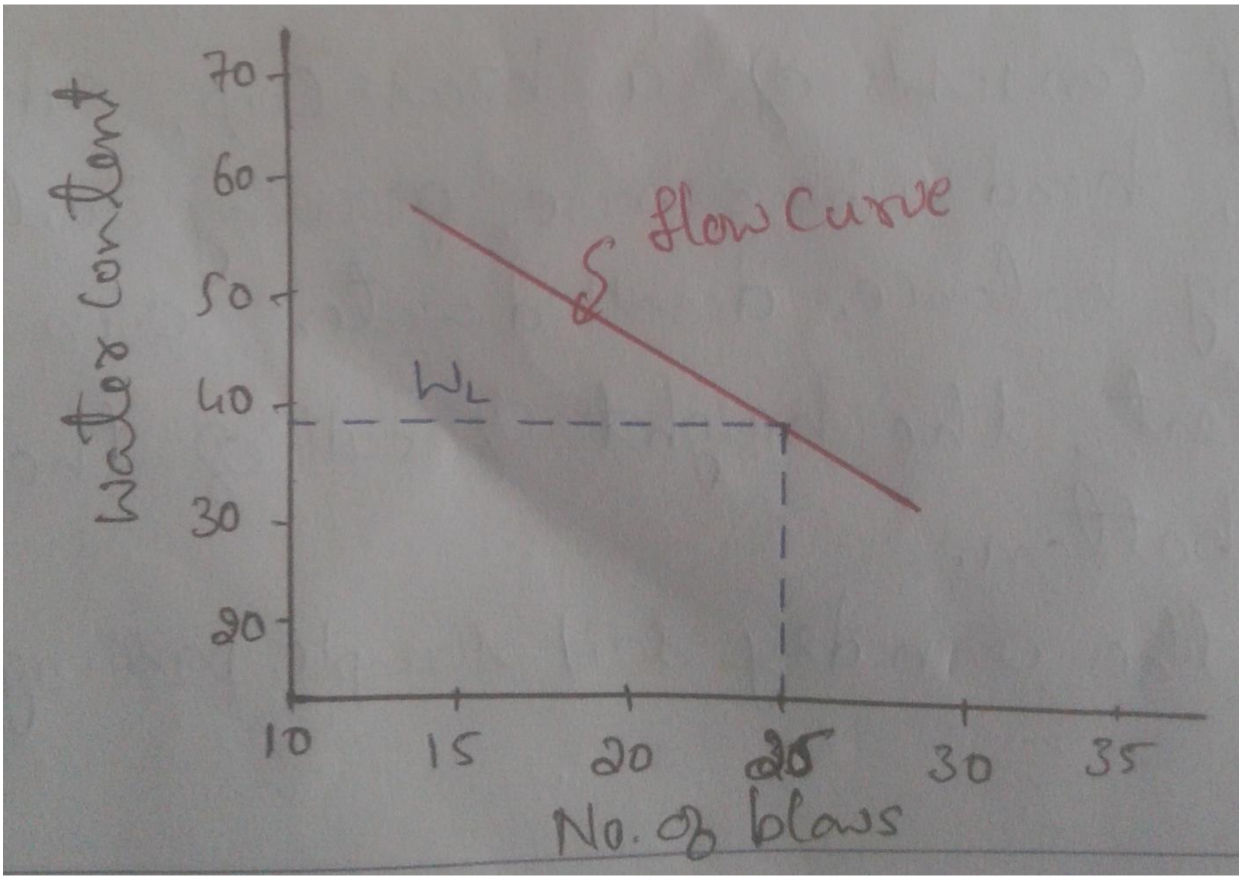

Fig 7.4 Relation between Water content and its Number of blows

Procedure:

1. Adjust the cup of the liquid limit apparatus with the help of grooving tool gauge.
2. Take about 120g of oven dry soil sample passing through 425 micron sieve.
3. Mix it thoroughly with 20% of distilled water to form a uniform paste.
4. Place a portion of the paste in the cup of the liquid limit device; smooth the surface with spatula to a maximum depth of 1cm.
5. Draw the grooving tool through the sample along the symmetrical axis of the cup, holding the tool perpendicular to the cup.
6. Turn the handle at rate of 2 revolutions per second and count the blows until two parts of the soil sample come into contact at the bottom of the groove.
7. Transfer about 15g of the soil near the closed groove for water content determination.
8. Transfer the remaining soil in the cup to the main soil sample in the basin and mix thoroughly after adding a small amount of water.
9. Repeat the procedure until you get a least range of 10 to 40 blows.
10. Plot a graph i.e, number of blows verses water content and read the 25 blow which is the value of liquid limit.

Tabular Column:

Sl No.	Determination No.	Trail 1	Trail 2	Trail 3	Trail 4	Trail 5
1	Number of blows					
2	Container No.					
3	Mass of empty metal container with lid, M_1g					
4	Mass of container + Wet soil, M_2g					
5	Mass of container + Dry soil, M_3g					
6	Mass of water, $M_4 = (M_2-M_3)$g					
7	Mass of dry soil, $M_5 = (M_3-M_1)$g					
8	Water Content, $w = \frac{(M2-M3)}{(M3-M1)} \times 100\%$					

Calculations:

Water Content, w = $\frac{(M2-M3)}{(M3-M1)}$ x 100%

Result:

Liquid Limit of soil sample (from graph), W_L (%) =

EXPERIMENT NO. 8

Consistency Limit Test

Object: To determine the plastic limit of the soil sample passing through 425 micron IS sieve and then to calculate plasticity index, flow index, toughness index.

Apparatus: 425 micron IS sieve, Balance, Oven, Glass plate, Non corrodible air-tight containers, Measuring jar, Desiccator, Distilled water.

Theory: Plastic limit is the water content corresponding to an arbitrary limit between the plastic and the semi solid states of consistency of a soil. The range of consistency with in which soil exhibits plastic properties is called plastic range and is indicated by plasticity index.

Plastic limit is defined as “the water content at which the soil changes from plastic state to semi-solid state”.

Plastic limit is again defined as “the minimum water content at which a soil will just begin to crumble when rolled into a thread approximately 3 mm in diameter”.

Plasticity Index	Soil Type	Degree of Plasticity	Degree of Cohesiveness
0	Sand	Non-plastic	Non-cohesive
<7	Silt	Low-plastic	Partly-cohesive
7-17	Silt clay	Medium-plastic	Cohesive
>17	clay	High-plastic	Cohesive

Applications:

The values of liquid limit and plastic limit are directly used for classifying the fine grained cohesive soils according to Indian Standard on soil classification. Once the soil is classified, it helps a lot in understanding the behaviour of soil and selecting the suitable method of design, construction and maintenance of the structure made up (or) and resting on soils. The values of these limits are also used in calculating the flow index, toughness index and relative plasticity index.

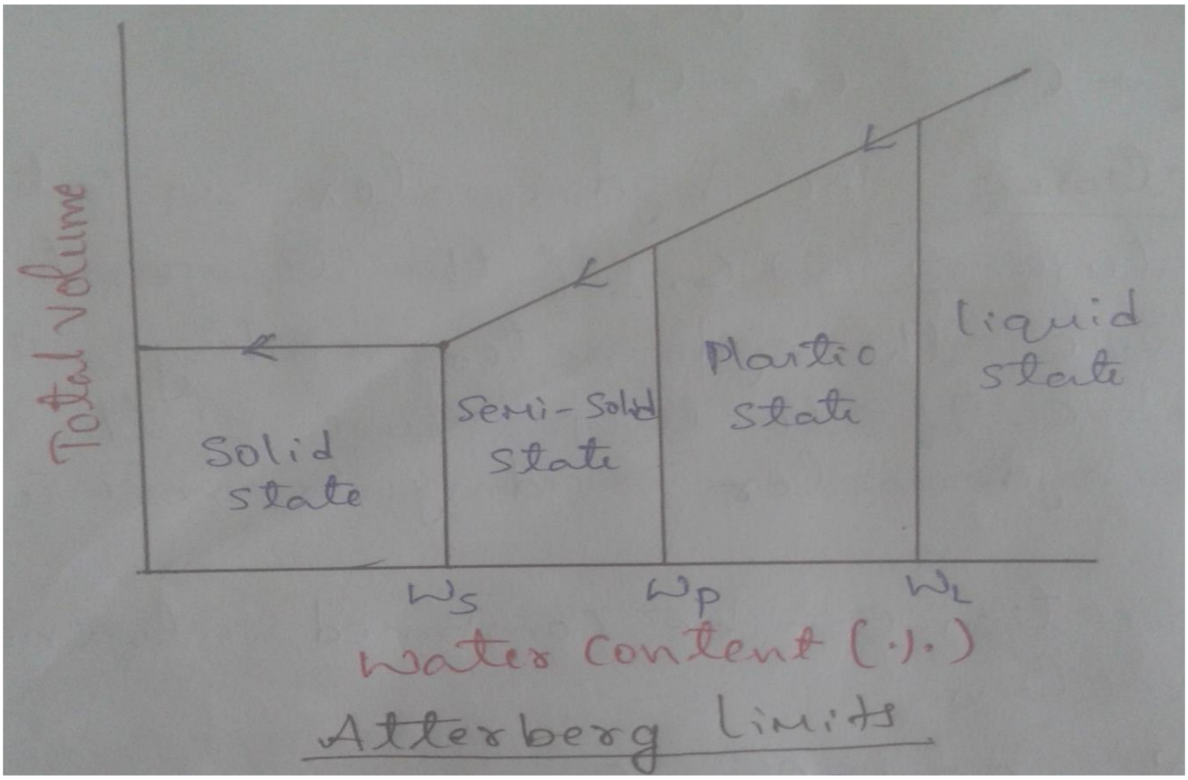

Fig 8.1 Relation between Volume of soil and its Water content

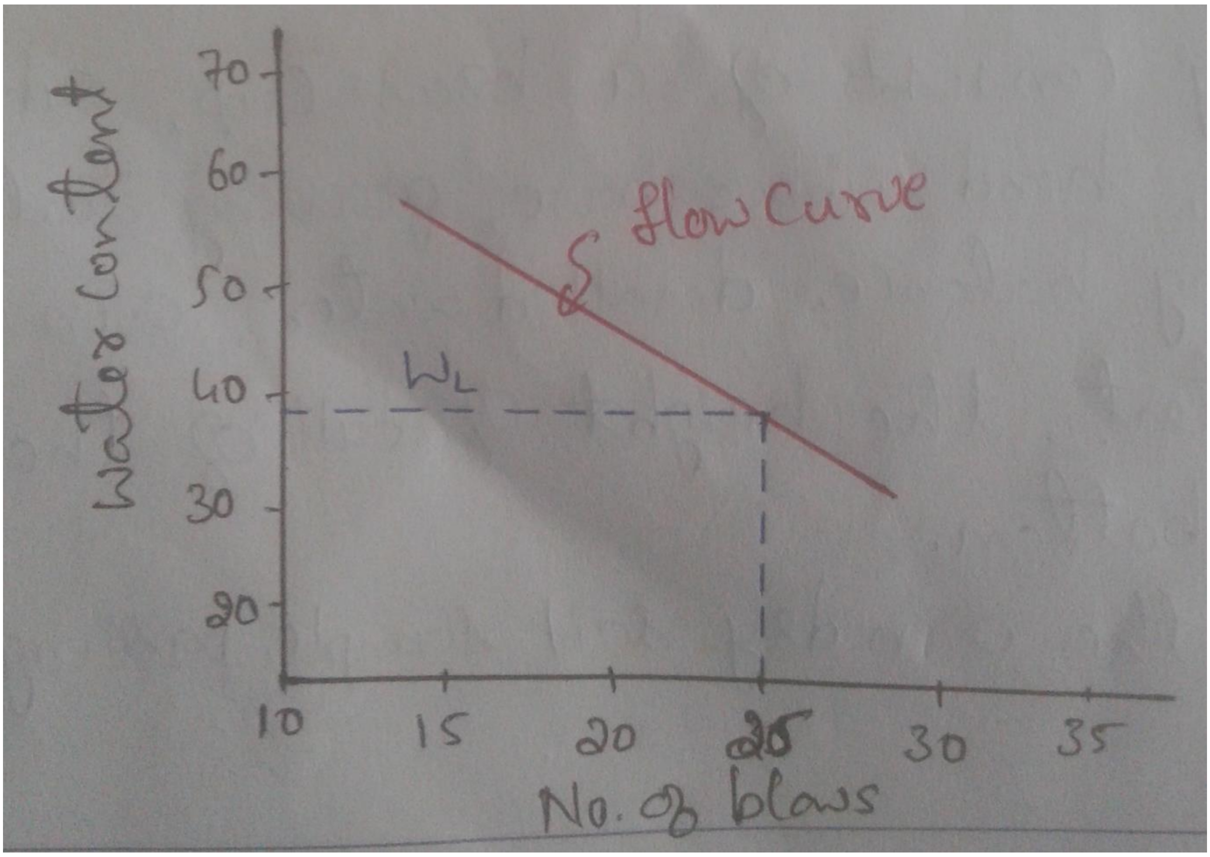

Fig 8.2 Relation between Water content and its Number of blows

Procedure:

1. Take about 30g of air dried sample passing through 425 micron IS sieve.
2. Mix thoroughly with distilled water on the glass plate until it is plastic enough to be shaped into a small ball.
3. Take about 10g of the plastic soil mass; make a ball of it with in the hands.
4. Then roll it on a glass plate with hand with just sufficient pressure to roll the soil mass into a thread of uniform diameter throughout its length.
5. If diameter of thread becomes less than 3mm without crack, it shows that water added in the soil mass is more than its plastic limit, hence the soil is kneaded further and rolled into thread again.
6. Repeat this rolling and remoulding process until the thread starts just crumpling at a diameter of 3mm.
7. Collect the crumbled soil thread in the air tight container and determine the water content.
8. Repeat the procedure for the remaining three soil samples.
9. From liquid limit graph, calculate the plasticity index, flow index and toughness index.

Tabular Column:

Sl No.	Determination No.	Trail 1	Trail 2	Trail 3
1	Container No.			
2	Mass of empty metal container with lid, M_1g			
3	Mass of container + Wet soil, M_2g			
4	Mass of container + Dry soil, M_3g			
5	Mass of water, $M_4 = (M_2-M_3)$g			
6	Mass of dry soil, $M_5 = (M_3-M_1)$g			
7	Plastic Limit, $W_P = \frac{(M2-M3)}{(M3-M1)}$ x 100%			
8	Average Plastic Limit, W_P%			

Calculations:

Plastic Limit, $W_P = \frac{(M2-M3)}{(M3-M1)} \times 100\%$

Plasticity Index, $I_P = (W_L - W_P)$

Flow Index, $I_F = \frac{W1-W2}{\log_{10}\frac{N100}{N10}}$

Toughness Index, $I_T = (I_P / I_F)$

Result:

Plastic Limit, W_P (%) =

Plasticity Index, I_P =

Flow Index, I_F =

Toughness Index, I_T =

Note: Here W_1=Water content at N_{10} blows and W_2=Water content at N_{100} blows.

EXPERIMENT NO. 9

Consistency Limit Test

Object: To determine the shrinkage limit of the soil sample passing through 425 micron IS sieve and then to calculate shrinkage ratio.

Apparatus: 425 micron IS sieve, Balance, Oven, Measuring jar, Desiccator, Distilled water, Mercury, Shrinkage dish, Porcelain dish, Glass plate with three prongs, Plain glass plate, Glass cup, Spatula, Knife.

Theory: Shrinkage limit is the maximum water content at which a reduction in water content does not cause an appreciable decrease in volume of the soil mass. At shrinkage limit, no further reduction in water, air starts to enter into the voids of the soil and keeps the volume of voids constant.

Shrinkage Limit is defined as “the water content at which the soil changes from semi-solid state to solid state”.

Shrinkage Ratio is defined as “the ratio of a given volume change expressed as a percentage of dry volume, to the corresponding change in water content above the shrinkage limit expressed as a percentage of the weight of the oven dried soil”.

Applications:

The value of shrinkage limit is used for understanding the swelling and shrinkage properties of cohesive soils. It is used for calculating the shrinkage factors which helps in the design problems of the structures made up of soils. It gives an idea about the suitability of soils as a construction material in foundations, roads, embankments and dams. It helps in knowing the state of the given soil. Approximate values of specific gravity of soil grains may also be determined from the data of shrinkage limit test.

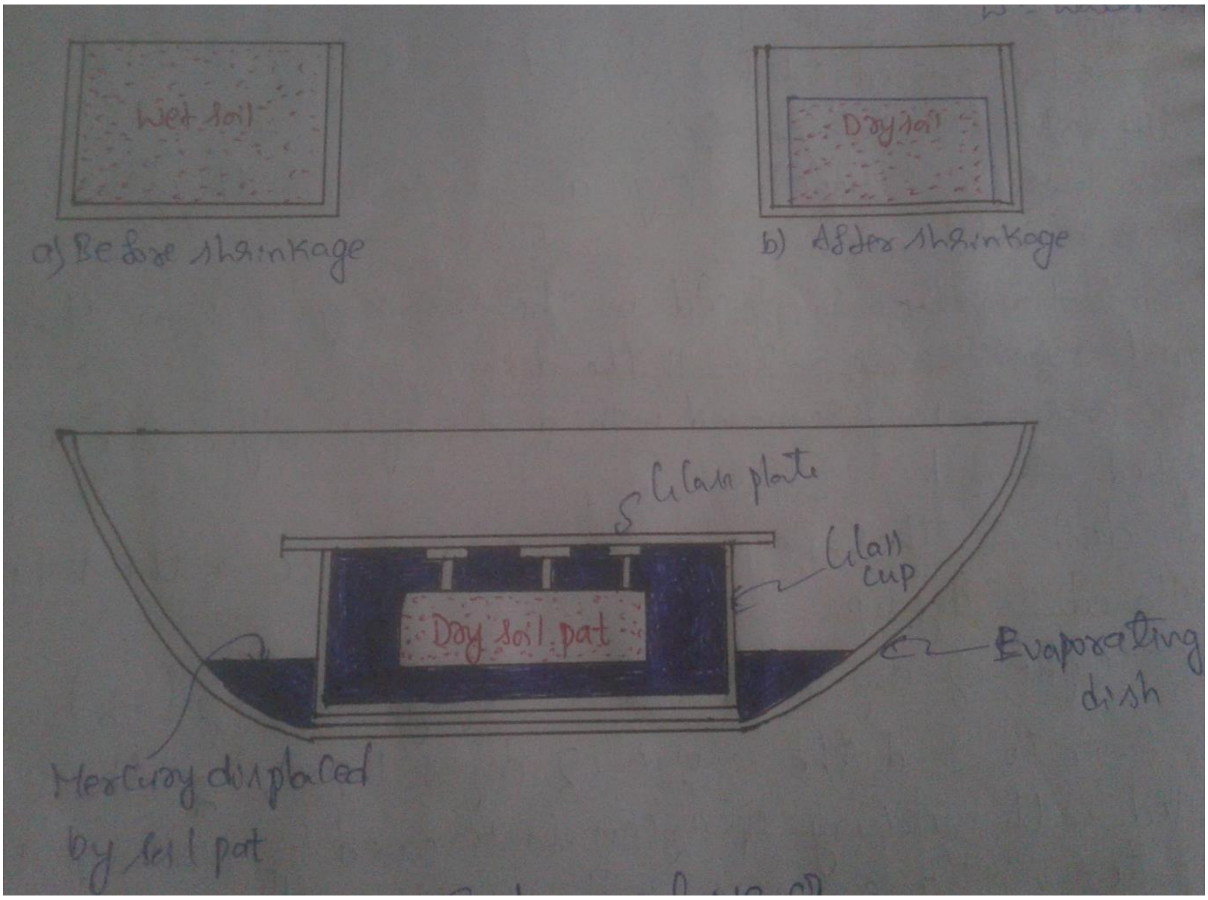

Fig 9.1 Shrinkage Limit Apparatus

Procedure:

1. First sieve the given soil sample using 425 micron sieve and take about 30g of soil sample which passed through the sieve.
2. Mix the soil with distilled water to bring the soil to a consistency without any air voids.
3. The shrinkage dish is coated with vaseline before placing the soil sample.
4. Note down the mass of empty shrinkage dish as M_1g.
5. Place the soil sample in the dish, by giving gentle taps and strike off the top surface with a straight edge.
6. Note down the mass of shrinkage dish along the wet soil as M_2g.
7. Dry the dish first in air and then keep it in an oven for 24 hours at a temperature of 105°C.
8. After 24 hours cool the shrinkage dish in desiccator for 10 minutes and note down the mass of shrinkage dish along the dry soil as M_3g.

a) Determination of volume of wet soil pat:

1. Note down the mass of empty evaporating dish as M_4g, which will be used for weighing mercury.
2. In order to find the volume of wet soil pat, keep the empty shrinkage dish in a large evaporating dish, fill it to overflowing with mercury and remove the excess by pressing the plain glass plate firmly over the top.
3. Transfer the mercury which is filled in shrinkage dish, carefully into the empty evaporating dish and note down the mass of mercury along the evaporating dish as M_5g.

b) Determination of volume of dry soil pat:

1. Again note down the mass of empty evaporating dish as M_6g.
2. In order to find out the volume of dry soil pat, keep the glass cup in a large evaporating dish, fill it to overflowing with mercury and remove the excess by pressing the plain glass plate firmly over the top.
3. Place the dry soil pat on the surface of the mercury and press the soil pat into the mercury.
4. Transfer the displaced mercury into the empty evaporating dish and note down the mass of evaporating dish along the displaced mercury as M_7g.

Note: Density of Mercury is equal to 13.6 which is used to find the volume of dry and wet soil pat.

Tabular Column:

Sl No.	Determination No.	Trail 1	Trail 2
1	Shrinkage dish No.		
2	Mass of empty shrinkage dish, M_1g		
3	Mass of shrinkage dish + Wet soil pat, M_2g		
4	Mass of shrinkage dish + Dry soil pat, M_3g		
5	Mass of water, $M_w = (M_2-M_3)$g		
6	Mass of dry soil pat, $M_d = (M_3-M_1)$g		
7	Water Content, $w = \frac{(M2-M3)}{(M3-M1)} \times 100\%$		
8	Evaporating dish No.		
9	Mass of empty evaporating dish, M_4g		
10	Mass of mercury + Mass of evaporating dish, M_5g		
11	Mass of mercury filling shrinkage dish, $M_s = (M_5-M_4)$g		
12	Volume of wet soil pat, $V_w = \frac{Ms}{13.6}$cm^3		
13	Evaporating dish No.		
14	Mass of empty evaporating dish, M_6g		
15	Mass of displaced mercury + Mass of evaporating dish, M_7g		
16	Mass of mercury displaced by dry soil pat, $M = (M_7-M_6)$g		
17	Volume of dry soil pat, $V_d = \frac{M}{13.6}$cm^3		
18	Shrinkage Limit, W_S		
19	Shrinkage Ratio, SR		

Calculations:

Shrinkage Limit, W_S = $\left[w - \frac{Vw - Vd}{Md}\right]$ X 100%

Shrinkage Ratio, SR = $\frac{Md}{Vd}$

Result:

Shrinkage Limit, W_S (%) =

Shrinkage Ratio, SR =

EXPERIMENT NO. 10

Compaction Test

Object: To determine the optimum moisture content and maximum dry density for a soil by standard proctor method.

Apparatus: Cylindrical mould, Metal rammer of 2.6kg, 4.75 mm IS sieve, Balance, Oven, Desiccator, Non corrodible air-tight containers, Measuring jar, Distilled water, Large mixing pan, Sample extruder, Straight edge.

Theory: Compaction generally leads to an increase in shear strength and helps to improve the stability and the bearing capacity of soil. It also reduces the compressibility and permeability of the soil. The compaction process may be accomplished by rolling, tamping (or) vibration. The purpose of laboratory compaction test is to determine the proper amount of water at which the weight of the soil grains in a unit volume of the compacted soil mass is maximum. Compaction is somewhat different from consolidation. Compaction of soil can be done in two methods:

(i) Standard Proctor Method (or) Light Compaction Method.
(ii) Modified Proctor Method (or) Heavy Compaction Method.

Compaction is defined as “the soil particles are artificially rearranged and packed together into a closer state of contact by mechanical means in order to decrease the porosity of the soil and thus increases its dry density”. The standard proctor test was developed by “R.R. Proctor” for the construction of earth fill dams.

Applications:

The results of this test are useful in the stability of field problems like earthen dams, embankments, roads and airfields. In such constructions, the soils are compacted. The water content at which the soils are compacted in the field is controlled by the value of optimum moisture content determined by the laboratory proctor compaction test. The compaction energy to be given by the maximum dry density determined in the laboratory. In other words, the laboratory compaction specification for field compaction of soils.

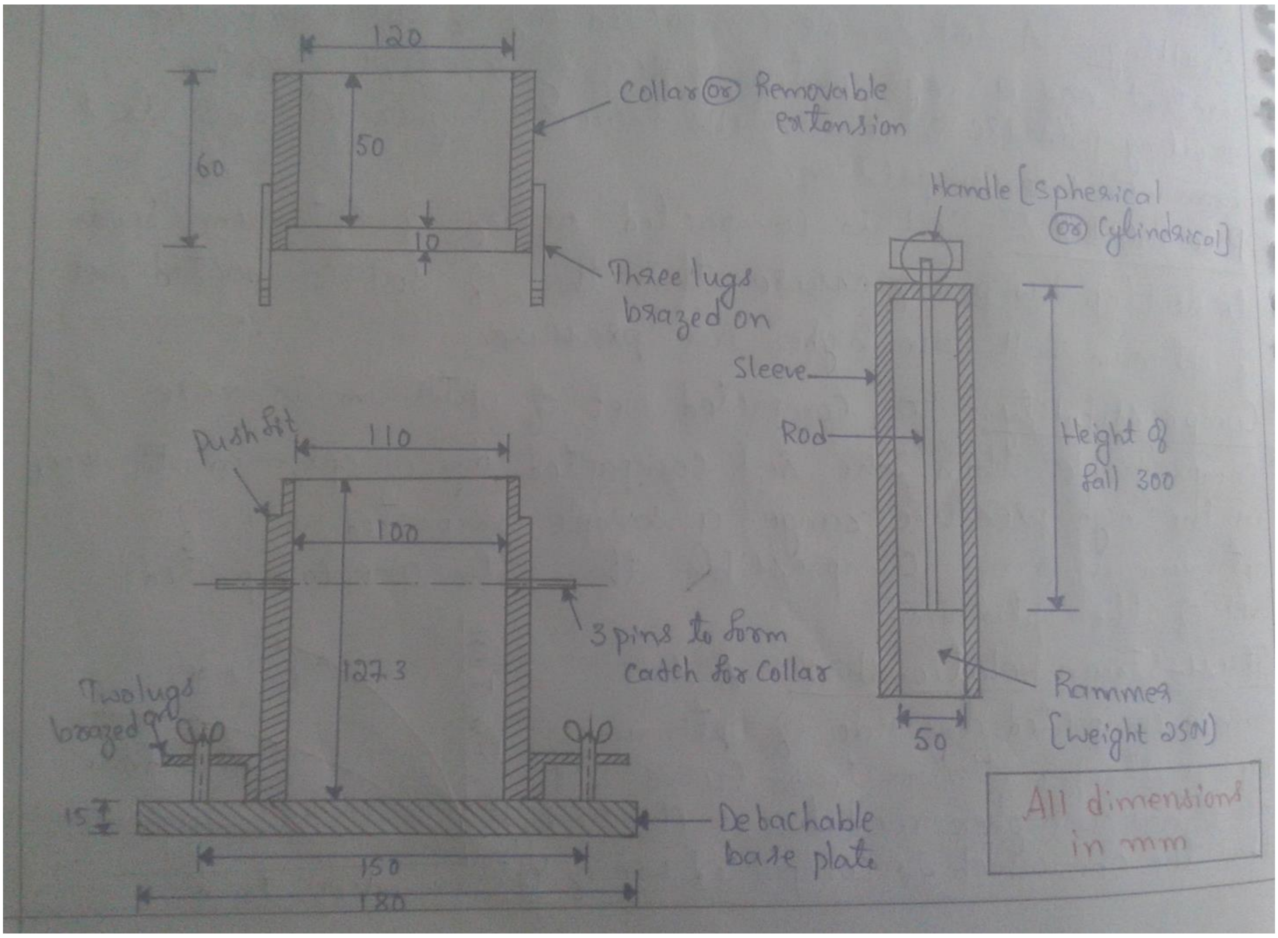

Fig 10.1 Standard Proctor Apparatus

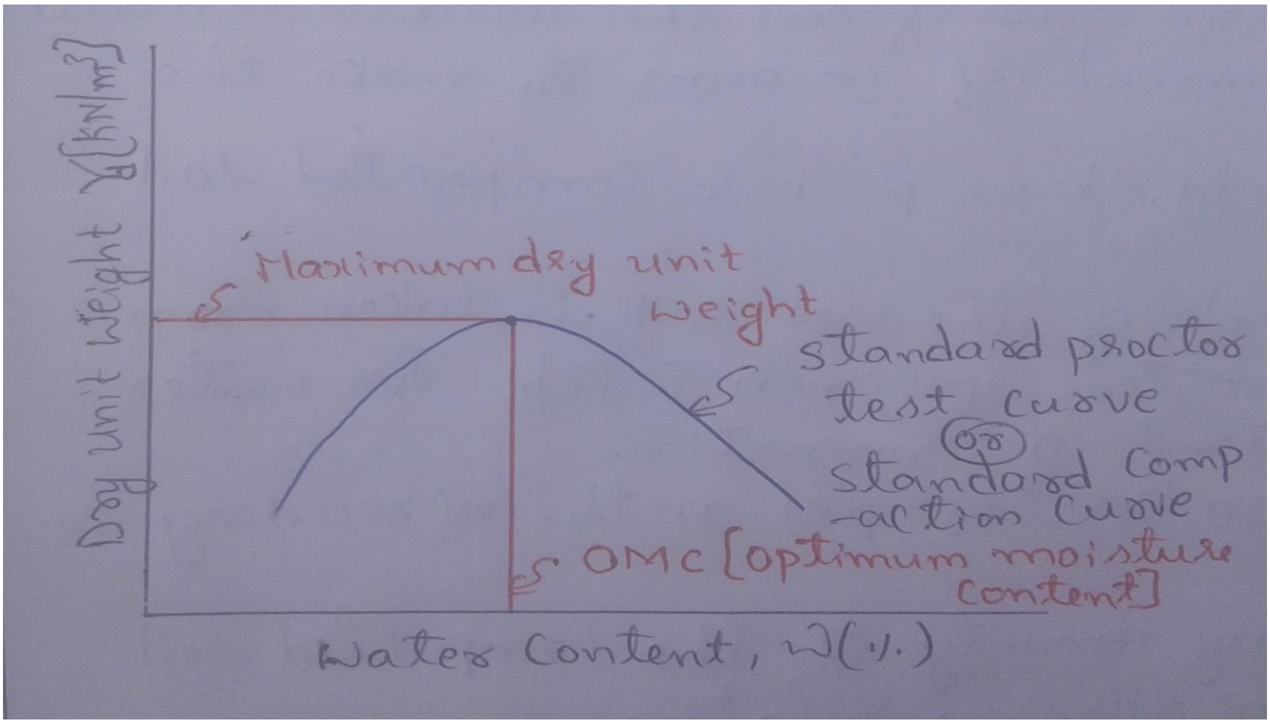

Fig 10.2 Compaction Curve

Procedure:

1. Measure the height and diameter of the mould and calculate its area and volume.
2. Take about 20kg of soil which is sieved through 4.75 mm sieve and add enough water to bring its moisture content then keep it in an air tight container for about 5 to 30 minutes for maturing.
3. Clean the mould and fix it to the base. Note down the mass of empty mould along the base plate as M_1g. Lubricate the mould with lubrication oil.
4. Take about 2.5kg of soil for 1000cc mould (or) 6kg for 2250cc mould for light compaction.
5. Again add water to bring its moisture content to about 4% for coarse grained soil and 10% for fine grained soils for first trail.
6. Fix the collar and place the mould on a flat surface.
7. Pour the soil into the mould in three layers by giving 25 blows for each layer using the metal rammer of mass 2.6kg with a free fall of 30cm.
8. Remove the collar and trim off the excess soil flush with the top of the mould.
9. Clean the outside of the mould and base plate. Note down the mass of mould along with the soil as M_2g.
10. Eject the soil from the mould, cut it in the middle and keep a representative soil sample in oven for 24 hours at a temperature of 110°C for moisture content determination.
11. Repeat the above procedure with 7, 10, 13, 16, 19, 22% of water for coarse grained fresh soil and 11, 14, 17, 20, 23, 26% of water for fine grained fresh soil.
12. Plot a graph i.e, moisture content versus dry density in order to calculate the optimum moisture content (OMC) and maximum dry density.

Observation:

Mass of soil taken for testing, M_s =

Internal diameter of mould, D (cm) =

Internal height of mould, H (cm) =

Cross-sectional area of mould, A (cm^2) = $\frac{\pi \text{ x D x D}}{4}$

Volume of mould, V (cm^3) = A x H =

Tabular Column:

Sl No.	Determination No.	Trail 1	Trail 2	Trail 3	Trail 4	Trail 5	Trail 6
1	Mass of empty mould, M_1g						
2	Mass of mould + Soil, M_2g						
3	Mass of soil, $M_3 = (M_2 - M_1)$g						
4	Container No.						
5	Mass of empty metal container with lid, M_4g						
6	Mass of container +Wet soil, M_5g						
7	Mass of container +Dry soil, M_6g						
8	Mass of water, $M_7 = (M_5 - M_6)$g						
9	Mass of dry soil, $M_8 = (M_6 - M_4)$g						
10	Water Content, $w = \frac{(M5-M6)}{(M6-M4)}$ x 100%						
11	Wet Density, γ g/cm^3						
12	Dry Density, γ_d g/cm^3						

Calculations:

Wet Density, γ (g/cm^3) = $\frac{(M2-M1)}{V}$

Dry Density, γ_d (g/cm^3) = $\frac{\gamma}{1+w}$

Result:

Optimum Moisture Content (from graph), w (%) =

Maximum Dry Density (from graph), γ_d (g/cm^3) =

EXPERIMENT NO. 11

Compaction Test

Object: To determine the optimum moisture content and maximum dry density for a soil by modified proctor method.

Apparatus: Cylindrical mould, Metal rammer of 4.9kg, 4.75 mm IS sieve, Balance, Oven, Desiccator, Non corrodible air-tight containers, Measuring jar, Distilled water, Large mixing pan, Sample extruder, Straight edge.

Theory: Compaction generally leads to an increase in shear strength and helps to improve the stability and the bearing capacity of soil. It also reduces the compressibility and permeability of the soil. The compaction process may be accomplished by rolling, tamping (or) vibration. The purpose of laboratory compaction test is to determine the proper amount of water at which the weight of the soil grains in a unit volume of the compacted soil mass is maximum. Compaction is somewhat different from consolidation. Compaction of soil can be done in two methods:

(i) Standard Proctor Method (or) Light Compaction Method.
(ii) Modified Proctor Method (or) Heavy Compaction Method.

Compaction is defined as “the soil particles are artificially rearranged and packed together into a closer state of contact by mechanical means in order to decrease the porosity of the soil and thus increases its dry density”. Modified proctor test was developed to achieve greater state of compaction. In case of heavier transport and airfield pavements relatively higher compaction is required. The modified proctor test was developed by the American Association of State Highway efficient.

Applications:

The results of this test are useful in the stability of field problems like earthen dams, embankments, roads and airfields. In such constructions, the soils are compacted. The water content at which the soils are compacted in the field is controlled by the value of optimum moisture content determined by the laboratory proctor compaction test. The compaction energy to be given by the maximum dry density determined in the laboratory. In other words, the laboratory compaction specification for field compaction of soils.

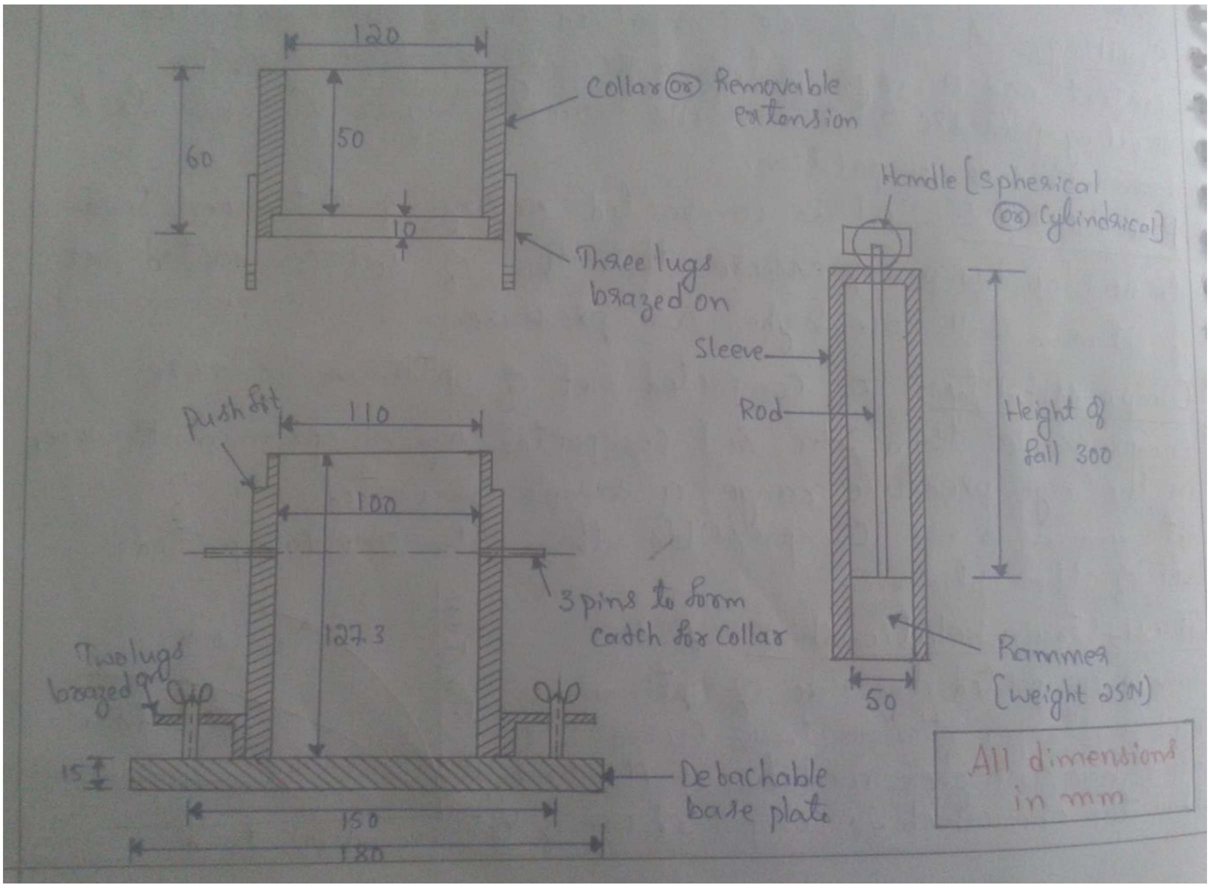

Fig 11.1 Modified Proctor Apparatus

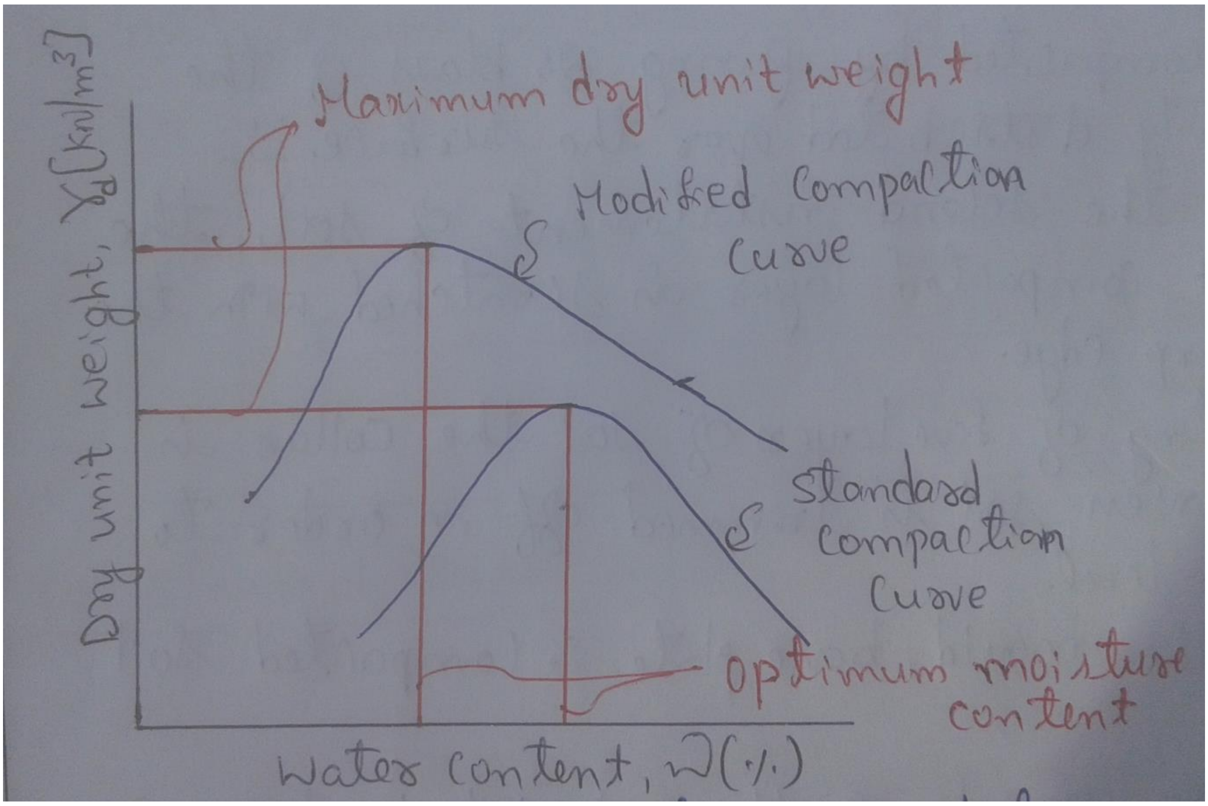

Fig 11.2 Compaction Curve

Procedure:

1. Measure the height and diameter of the mould and calculate its area and volume.
2. Take about 20kg of soil which is sieved through 4.75 mm sieve and add enough water to bring its moisture content then keep it in an air tight container for about 5 to 30 minutes for maturing.
3. Clean the mould and fix it to the base. Note down the mass of empty mould along the base plate as M_1g. Lubricate the mould with lubrication oil.
4. Take about 2.8kg of soil for 1000cc mould (or) 6.5kg for 2250cc mould for heavy compaction.
5. Again add water to bring its moisture content to about 4% for coarse grained soil and 10% for fine grained soils for first trail.
6. Fix the collar and place the mould on a flat surface.
7. Pour the soil into the mould in five layers by giving 45 blows for each layer using the metal rammer of mass 4.9kg with a free fall of 45cm.
8. Remove the collar and trim off the excess soil flush with the top of the mould.
9. Clean the outside of the mould and base plate. Note down the mass of mould along with the soil as M_2g.
10. Eject the soil from the mould, cut it in the middle and keep a representative soil sample in oven for 24 hours at a temperature of 110°C for moisture content determination.
11. Repeat the above procedure with 7, 10, 13, 16, 19, 22% of water for coarse grained fresh soil and 11, 14, 17, 20, 23, 26% of water for fine grained fresh soil.
12. Plot a graph i.e, moisture content versus dry density in order to calculate the optimum moisture content (OMC) and maximum dry density.

Observation:

Mass of soil taken for testing, M_s =

Internal diameter of mould, D (cm) =

Internal height of mould, H (cm) =

Cross-sectional area of mould, A (cm^2) = $\frac{\pi \text{ x D x D}}{4}$

Volume of mould, V (cm^3) = A x H =

Tabular Column:

Sl No.	Determination No.	Trail 1	Trail 2	Trail 3	Trail 4	Trail 5	Trail 6
1	Mass of empty mould, M_1g						
2	Mass of mould + Soil, M_2g						
3	Mass of soil, $M_3 = (M_2 - M_1)$g						
4	Container No.						
5	Mass of empty metal container with lid, M_4g						
6	Mass of container +Wet soil, M_5g						
7	Mass of container +Dry soil, M_6g						
8	Mass of water, $M_7 = (M_5 - M_6)$g						
9	Mass of dry soil, $M_8 = (M_6 - M_4)$g						
10	Water Content, $w = \frac{(M5-M6)}{(M6-M4)} \times 100\%$						
11	Wet Density, γ g/cm^3						
12	Dry Density, γ_d g/cm^3						

Calculations:

Wet Density, γ (g/cm^3) = $\frac{(M2-M1)}{V}$

Dry Density, γ_d (g/cm^3) = $\frac{\gamma}{1+w}$

Result:

Optimum Moisture Content (from graph), w (%) =

Maximum Dry Density (from graph), γ_d (g/cm^3) =

EXPERIMENT NO. 12

Permeability Test

Object: To determine the co-efficient of permeability of given soil at desired density by constant head method.

Apparatus: Jodhpur permeameter, Permeameter mould (internal diameter of 10cm, effective height of 12.73cm and capacity of 1000cc), Accessories of the permeameter (cover, base, detachable collar, porous stones, dummy plate), Round filter paper, Constant head reservoir, Graduated glass stand pipe (internal diameter 5 to 20mm, preferably 10mm), support frame, Clamps, Funnel, Measuring flask, Meter scale, Balance, Stop watch, Distilled water, Oven, 4.75 mm IS sieve, Straight edge, Desiccator, Non corrodible air-tight containers.

Theory: The flow of water through the soils may be laminar (or) turbulent depending upon the "Reynold's Number". In 'laminar' flow, each fluid particle travels along a definite path which never crosses the path of any other particle. In 'turbulent' flow, the particles do not follow any definite path but the paths are irregular, twisting, crossing and recrossing. The study of seepage of water through soil is important for the following engineering problems:

(i) Determination of rate of settlement of a saturated compressible soil layer.
(ii) Calculation of seepage through the body of earth dams and stability of slopes.
(iii) Calculation of uplift pressure under hydraulic structures and their safety against piping.
(iv) Ground water flow towards wells and drainage of soil.

Permeability is defined as "the property of a porous material which permits the passage (or) seepage of water through its interconnecting voids".

Permeability is also defined as "the property of the soils which permits water to percolate through its continuously connected voids".

Type of Soil	Value of k (cm/sec)
Gravel	10^3-10
Sand	1.0-10^{-3}
Silt	10^{-3}-10^{-6}
Clay	Less than 10^{-6}

Applications:

Water flowing through soil exerts considerable seepage forces which have direct effect on the safety of hydraulic structure. The rate of settlement of compressible clay layer under load depends on its permeability. The quantity of stored water escaping through and beneath an earthen dam depends on the permeability of the embankments and the foundations respectively. The rate of drainage of water through wells and excavated foundation pits depends on the coefficient of permeability of the soils. Shear strength of the soils also depends indirectly on its permeability, because dissipation of pore pressure is controlled by its permeability.

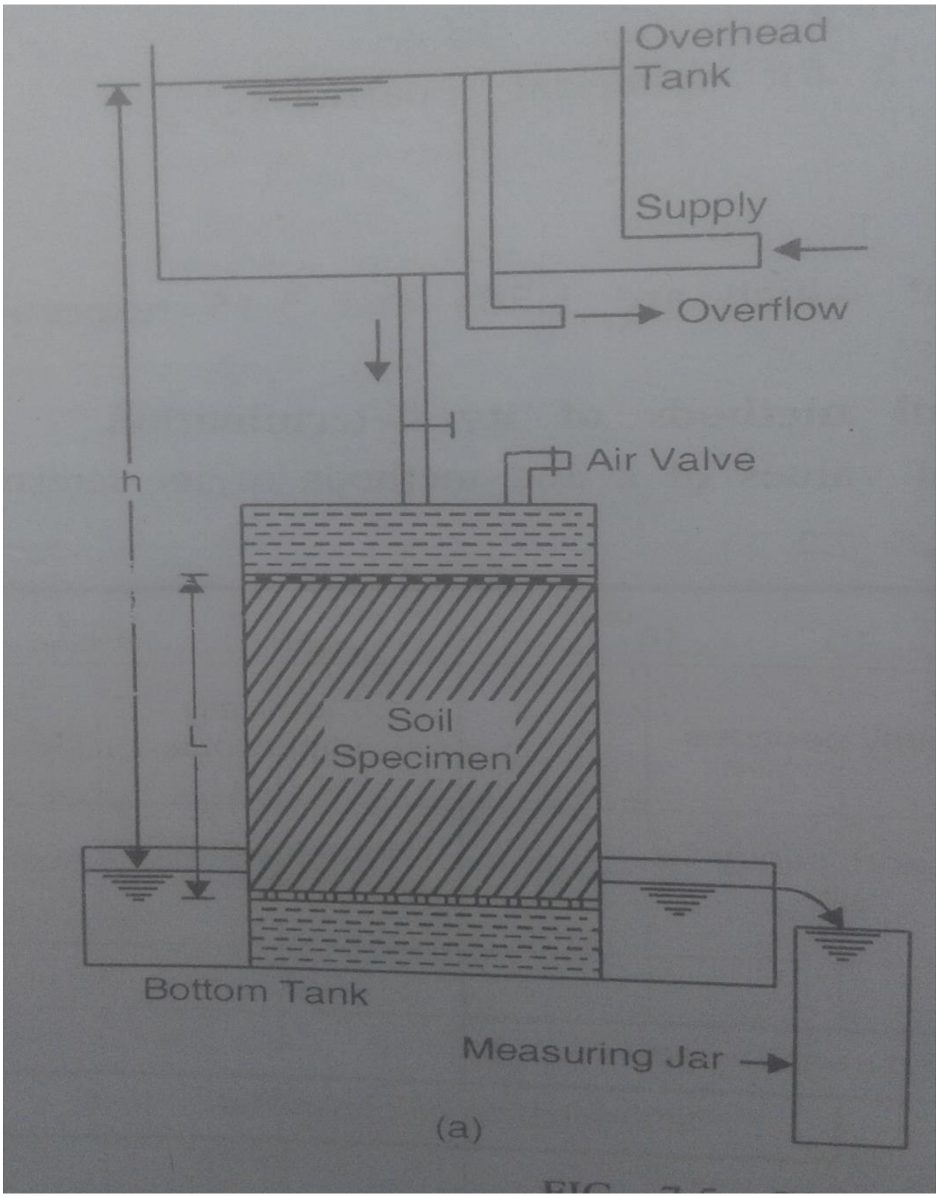

Fig 12.1 Constant Head Apparatus

Procedure:

1. Take 1000g of soil sample and raise its water content to the optimum water content and leave the soil in an air tight container for some time.
2. First measure the internal height and diameter of the mould to determine the area and volume of the mould.
3. Then note down the weight of the mould along the dummy plate.
4. Assemble the permeameter for dynamic compaction. For this, grease the mould lightly from inside and place it upside down on the dynamic compaction base.
5. Attach the collar to the other end.
6. Compact the soil in two layers by giving 15 blows using 2.5kg rammer for each layer.
7. Remove the collar and trim of the excess soil on top portion.
8. Clean the outside of the mould and dummy plate.
9. Note down the mass of soil along the mould with dummy plate.
10. Place the porous stone inside the base plate and filter paper on the base plate.
11. Remove the dummy plate and place the mould with washer on the base plate.
12. Put some amount of soil sample in oven to determine the water content.
13. Place a filter paper, porous stone and washer on the top of the soil sample and fix up the collar again.
14. Then note down the length of the soil sample.
15. Connect the reservoir with water to the outlet at the bottom of the mould and allow the water to flow in. Wait till the water has been able to travel up and saturate the sample.
16. Fill the remaining portion of the cylinder with water without disturbing the surface of the soil.
17. Fix the cover plate over the collar and tighten the nuts in the rods.
18. Disconnect the reservoir from the outlet at the bottom and connect the stand pipe to the inlet at the top plate.
19. Adjust the hydraulic head by adjusting the relative heights of the permeameter mould and the constant head tank.
20. Open the stop cock at the cover and allow water to flow out so that all the air in the cylinder is removed.
21. When all the air is escaped, close the stop cock and open the bottom outlet. Allow the water to flow through the soil and establish a steady flow.

22. When steady flow is reached collect the water in a measuring flask for a convenient time interval. Measure the quantity of water collected in the measuring flask during that time.
23. Repeat the procedure for two times, under the same head and for the same time interval.
24. Stop the flow of water, disconnect all parts.
25. Take some quantity of the soil sample from the mould for water content determination.
26. Measure the temperature of the water.

Tabular Column:

Sl No.	Determination No.	Trail 1
1	Height of the sample, L cm	
2	Diameter of the sample, D cm	
3	Area of the sample, $A = \frac{\pi \text{ x } D \text{ x } D}{4}$ cm^2	
4	Volume of the sample, $V = A \text{ x } H$ cm^3	
5	Moisture content at the start, w %	
6	Mass of mould along the dummy plate, M_1g	
7	Mass of mould + Soil, M_2g	
8	Mass of soil, $Ms = (M_2 - M_1)$g	
9	Wet Density, $\gamma = \frac{(M2-M1)}{V}$ g/cm^3	
10	Dry Density, $\gamma_d = \frac{\gamma}{1+w}$ g/cm^3	
11	Void Ratio, $e = \frac{G}{\gamma d} - 1$	
12	Specific Gravity, G	

Tabular Column:

Sl No.	Determination No.	Trail 1	Trail 2	Trail 3
1	Container No.			
2	Mass of empty metal container with lid, M_1g			
3	Mass of container + Wet soil, M_2g			
4	Mass of container + Dry soil, M_3g			
5	Mass of water, $M_4 = (M_2-M_3)$g			
6	Mass of dry soil, $M_5 = (M_3-M_1)$g			
7	Water Content, $w = \frac{(M2-M3)}{(M3-M1)}$ x 100%			
8	Degree of saturation, $s = \frac{w \times G}{e}$			

Tabular Column:

Sl No.	Determination No.	Trail 1
1	Hydraulic head, h cm	
2	Time interval, t sec	
3	Quantity of flow, Q ml (a) I test for time, t_1 ml (b) II test for the same time, t_2 ml (c) III test for the same time, t_3 ml	
4	Average quantity of flow, $Q = \frac{t1+t2+t3}{3}$ml	
5	Co-efficient of permeability, k_t cm/sec	
6	Co-efficient of permeability, k_{27} cm/sec	

Calculations:

Co-efficient of Permeability, k_t (cm/sec) = $\frac{Q}{t} X \frac{L}{h} X \frac{1}{A}$

Co-efficient of Permeability, k_{27} (cm/sec) = $k_t\ X \frac{ŋT}{ŋ27}$

Result:

Co-efficient of Permeability, k_t (cm/sec) =

Co-efficient of permeability, k_{27} (cm/sec) =

Note: ŋT = Co-efficient of Viscosity at T°C and ŋ27 = Co-efficient of Viscosity at 27°C.

EXPERIMENT NO. 13

Permeability Test

Object: To determine the co-efficient of permeability of given soil at desired density by variable head method.

Apparatus: Jodhpur permeameter, Permeameter mould (internal diameter of 10cm, effective height of 12.73cm and capacity of 1000cc), Accessories of the permeameter (cover, base, detachable collar, porous stones, dummy plate), Round filter paper, Constant head reservoir, Graduated glass stand pipe (internal diameter 5 to 20mm, preferably 10mm), support frame, Clamps, Funnel, Measuring flask, Meter scale, Balance, Stop watch, Distilled water, Oven, 4.75 mm IS sieve, Straight edge, Desiccator, Non corrodible air-tight containers.

Theory: The flow of water through the soils may be laminar (or) turbulent depending upon the "Reynold's Number". In 'laminar' flow, each fluid particle travels along a definite path which never crosses the path of any other particle. In 'turbulent' flow, the particles do not follow any definite path but the paths are irregular, twisting, crossing and recrossing. The study of seepage of water through soil is important for the following engineering problems:

(i) Determination of rate of settlement of a saturated compressible soil layer.
(ii) Calculation of seepage through the body of earth dams and stability of slopes.
(iii) Calculation of uplift pressure under hydraulic structures and their safety against piping.
(iv) Ground water flow towards wells and drainage of soil.

Permeability is defined as "the property of a porous material which permits the passage (or) seepage of water through its interconnecting voids".

Permeability is also defined as "the property of the soils which permits water to percolate through its continuously connected voids".

Type of Soil	**Value of k (cm/sec)**
Gravel	10^{3}-10
Sand	1.0-10^{-3}
Silt	10^{-3}-10^{-6}
Clay	Less than 10^{-6}

Applications:

Water flowing through soil exerts considerable seepage forces which have direct effect on the safety of hydraulic structure. The rate of settlement of compressible clay layer under load depends on its permeability. The quantity of stored water escaping through and beneath an earthen dam depends on the permeability of the embankments and the foundations respectively. The rate of drainage of water through wells and excavated foundation pits depends on the coefficient of permeability of the soils. Shear strength of the soils also depends indirectly on its permeability, because dissipation of pore pressure is controlled by its permeability. The variable head method is used for relatively less permeable soils where the discharge is small.

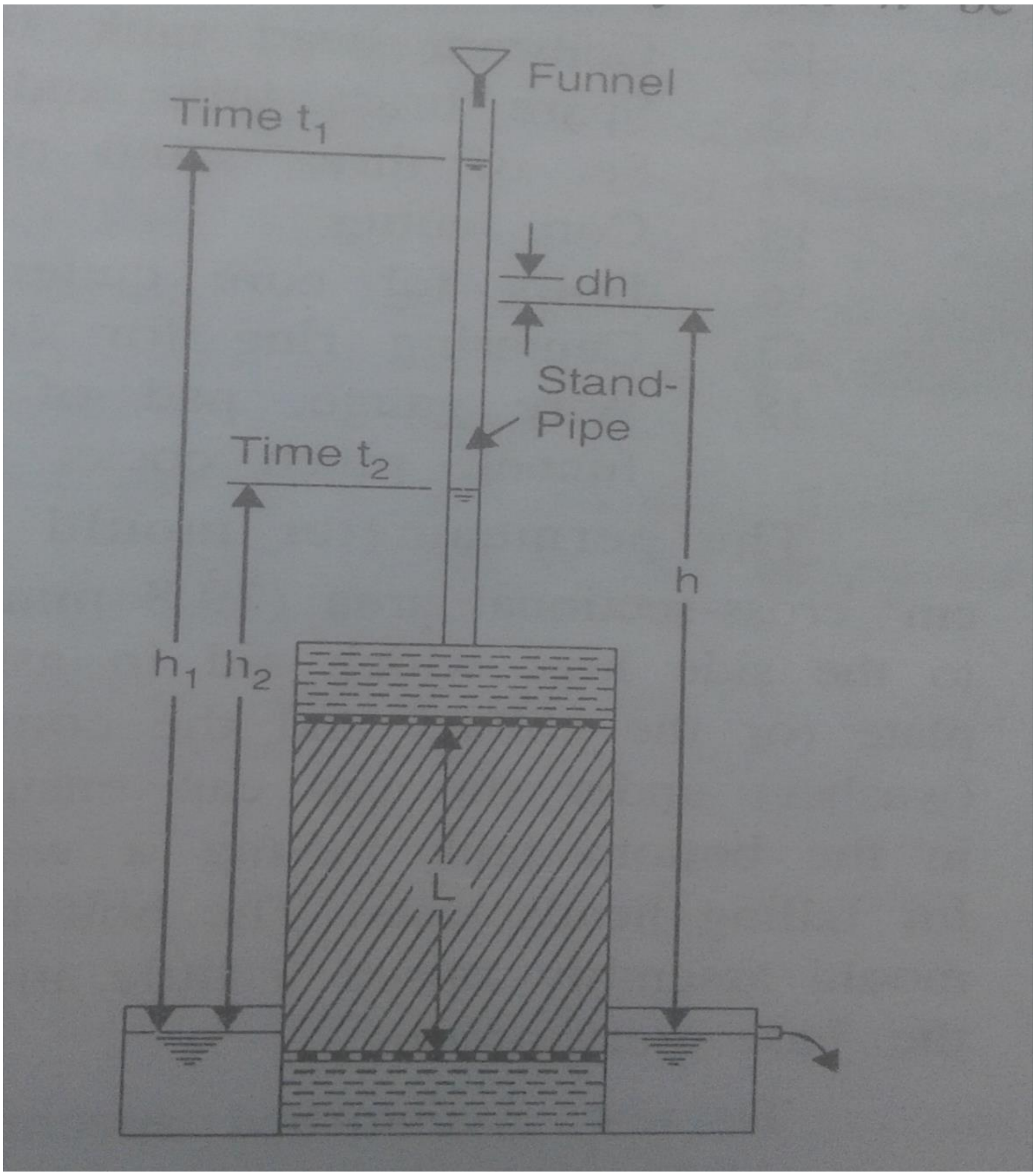

Fig 13.1 Variable Head Apparatus

Procedure:

1. Take 1000g of soil sample and raise its water content to the optimum water content and leave the soil in an air tight container for some time.
2. First measure the internal height and diameter of the mould to determine the area and volume of the mould.
3. Then note down the weight of the mould along the dummy plate.
4. Assemble the permeameter for dynamic compaction. For this, grease the mould lightly from inside and place it upside down on the dynamic compaction base.
5. Attach the collar to the other end.
6. Compact the soil in two layers by giving 15 blows using 2.5kg rammer for each layer.
7. Remove the collar and trim of the excess soil on top portion.
8. Clean the outside of the mould and dummy plate.
9. Note down the mass of soil along the mould with dummy plate.
10. Place the porous stone inside the base plate and filter paper on the base plate.
11. Remove the dummy plate and place the mould with washer on the base plate.
12. Put some amount of soil sample in oven to determine the water content.
13. Place a filter paper, porous stone and washer on the top of the soil sample and fix up the collar again.
14. Then note down the length of the soil sample.
15. Connect the reservoir with water to the outlet at the bottom of the mould and allow the water to flow in. Wait till the water has been able to travel up and saturate the sample.
16. Fill the remaining portion of the cylinder with water without disturbing the surface of the soil.
17. Fix the cover plate over the collar and tighten the nuts in the rods.
18. Disconnect the reservoir from the outlet at the bottom and connect the stand pipe to the inlet at the top plate.
19. Open the stop cock at the top and allow water to flow out so that all the air in the cylinder is removed.
20. Fix the height h_1 and h_2 on the pipe from the centre of the outlet such that (h_1-h_2) is about 30 to 40cm. Mark the level of $\sqrt{h_1h_2}$ from the centre of the outlet.
21. Record the time intervals for the head to fall from h_1 to $\sqrt{h_1h_2}$ and from $\sqrt{h_1h_2}$ to h_2. The time interval should be same, otherwise steady flow is established.

22. Change the height h_1 and h_2 and record the time intervals.
23. Stop the flow of water, disconnect all parts.
24. Take some quantity of the soil sample from the mould for water content determination.
25. Measure the temperature of the water.

Tabular Column:

Sl No.	Determination No.	Trail 1
1	Height of the sample, L cm	
2	Diameter of the sample, D cm	
3	Area of the sample, $A = \frac{\pi \text{ x } D \text{ x } D}{4}$ cm^2	
4	Volume of the sample, V = A x H cm^3	
5	Moisture content at the start, w %	
6	Mass of mould along the dummy plate, M_1g	
7	Mass of mould + Soil, M_2g	
8	Mass of soil, $Ms = (M_2 - M_1)$g	
9	Wet Density, $ɣ = \frac{(M2-M1)}{V}$g/cm^3	
10	Dry Density, $ɣ_d = \frac{ɣ}{1+w}$g/cm^3	
11	Void Ratio, $e = \frac{G}{ɣd} - 1$	
12	Specific Gravity, G	

Tabular Column:

Sl No.	Determination No.	Trail 1	Trail 2	Trail 3
1	Container No.			
2	Mass of empty metal container with lid, M_1g			
3	Mass of container + Wet soil, M_2g			
4	Mass of container + Dry soil, M_3g			
5	Mass of water, $M_4 = (M_2 - M_3)$g			
6	Mass of dry soil, $M_5 = (M_3 - M_1)$g			
7	Water Content, $w = \frac{(M2-M3)}{(M3-M1)}$ x 100%			
8	Degree of saturation, $S = \frac{w \times G}{e}$			

Tabular Column:

Sl No.	Determination No.	Trail 1
1	Diameter of stand pipe, cm	
2	Cross sectional area of stand pipe, a cm^2	
3	Initial head, h_1 cm	
4	Final head, h_2 cm	
5	Head, $\sqrt{h_1 h_2}$ cm	
6	Time interval, T sec (a) From h_1 to $\sqrt{h_1 h_2}$, (b) From $\sqrt{h_1 h_2}$ to h_2 , (c) From h1 to h2, t = (a) + (b)	
7	$\text{Log}_{10} \frac{h1}{h2}$	

8	Co-efficient of permeability, k_t cm/sec	
9	Co-efficient of permeability, k_{27} cm/sec	

Calculations:

Co-efficient of Permeability, k_t (cm/sec) = $2.303 \text{ X } \frac{al}{At} \text{ X } \log_{10}\frac{h1}{h2}$

Co-efficient of Permeability, k_{27} (cm/sec) = $k_t \text{ X } \frac{ŋT}{ŋ27}$

Result:

Co-efficient of Permeability, k_t (cm/sec) =

Co-efficient of permeability, k_{27} (cm/sec) =

Note: ŋT = Co-efficient of Viscosity at T°C and ŋ27 = Co-efficient of Viscosity at 27°C.

EXPERIMENT NO. 14

Shear Strength Test

Object: To determine the shear strength parameters of the given soil sample at known density and water content with help of shear box test.

Apparatus: Shear box (Non-corrosive metal, size of 60 x 60 x 50 mm), Container for shear box, Grid plates, Base plates, Porous stones, Loading pad, Loading frame, Loading yoke, Proving ring, Dial gauge, Sample trimmer, Stop clock, Balance, Spatula, Straight edge, Non corrodible air-tight containers, Oven, Desiccator, Distilled water, Weights, Scale.

Theory: The shear strength of a soil mass is its property against sliding along internal planes within itself. The stability of slope in an earth dam (or) hills and the foundations of structures built on different type of soil depend upon the shearing resistance. Shear strength of a soil has its maximum resistance to shearing stress at failure on the failure plane. Shear strength is composed of:

(i) Internal friction which is the resistance due to friction between individual particles at their contact points and interlocking of particles.

(ii) Cohesive this is resistance due to interparticles forces which tend to hold the particles together in a soil mass.

Again depending upon the drainage conditions, three types of shear tests have been developed:

(a) Undrained Test- Water is not allowed to drain out during the entire test, hence there is no dissipation of pore pressure.

(b) Consolidated Undrained Test- Soil is allowed to consolidated under the initially applied normal stress only, hence drainage is permitted. But no drainage is allowed during shear.

(c) Drained Test- Drainage is allowed throughout the test during the application of both normal and shear stresses. No pore pressure is set-up at any stage of the test.

Shear parameter are also used in computing the safe bearing capacity of the foundation soils and the earth pressure behind retaining walls. In a Direct Shear Test the sample is sheared along the horizontal plane.

Applications:

The purpose of direct shear test is to get the ultimate shear resistance, peak shear resistance cohesion, angle of internal friction, Φ and shear stress-strain characteristics of the soil. Shear parameters are used in the design of earthen dams and embankments. These are used in calculating the bearing capacity of soil-foundation systems. Parameters help in estimating the earth pressures behind the retaining walls. The values of these parameters are also used in checking the stability of natural slopes, cuts and fills.

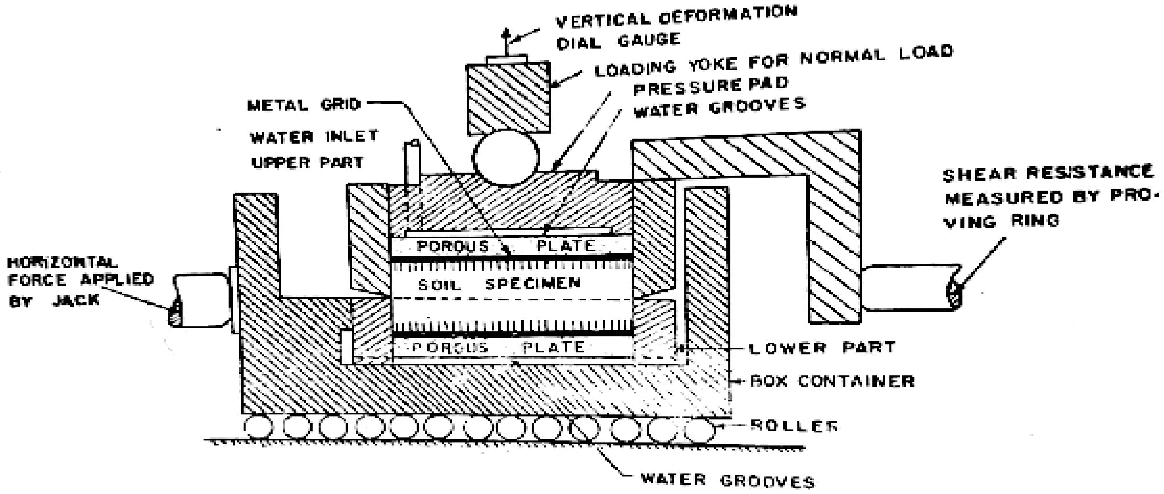

Fig 14.1 Shear Box Test Apparatus

Procedure:

1. Prepare a soil specimen of size 6cm x 6cm either from undisturbed soil sample or from compacted and remoulded sample. Soil specimen may directly be prepared in the box by compaction.
2. Non cohesive soils and dry soils may be tamped in the shear box itself with base olate and grip plate as required at the bottom and top.
3. Place the base plate in the shear box, porous stone and grip plate below the specimen and also place the grip plate and porous stone above the specimen.
4. Transfer the soil specimen into the shear box.
5. Fix the assembly in position of shear machine.
6. Bring the upper half of the box in contact with proving ring assembly.
7. Mount the loading yoke on the ball placed on the loading pad.
8. Mount one dial gauge on the yoke to record the vertical movement and other dial gauge on the container to record the shear movement.
9. Put the weights on the loading yoke to apply the normal stress.
10. Remove the fixing screws from the box so that the parts are moving against each other.
11. Adjust all the dial gauges to read zero.
12. Conduct the test by applying horizontal shear load, rate of strain may vary from 1 to 2.5mm/min.
13. Take the readings of proving ring and dial gauge displacement till the specimen fails.
14. Repeat the test on 3 or 4 identical specimen under increasing normal stress.
15. Plot the applied normal stress along x-axis and shear stress along y-axis. Draw the failure envelope. The slope of failure envelope gives us the angle of internal friction and vertical intercept gives the cohesion.

Observation:

Cross-sectional area of specimen, A_0 (cm^2) =

Least count of dial gauge, LC (mm) =

Least count of proving ring, LC (mm) =

Proving ring constant, PRC (N/div) = $\frac{\text{Load}}{\text{Division}}$

Tabular Column:

Normal Stress = 0.5 kg/cm^2

Dial gauge reading	Shear Strain ΔL = (1) x LC	Proving ring reading	Load P = (3) x PRC	Corrected Area $A_c = A_0 (1- \frac{\Delta L}{3})$	Shear Stress $\tau = \frac{(4)}{(5)}$ kg/cm^2
(1)	(2)	(3)	(4)	(5)	

Normal Stress = 1.0 kg/cm^2

Dial gauge reading	Shear Strain $\Delta L = (1) \times LC$	Proving ring reading	Load $P = (3) \times PRC$	Corrected Area $A_c = A_0 (1- \frac{\Delta L}{3})$	Shear Stress $\tau = \frac{(4)}{(5)}$ kg/cm^2
(1)	(2)	(3)	(4)	(5)	

Normal Stress = 1.5 kg/cm^2

Dial gauge reading	Shear Strain $\Delta L = (1) \times LC$	Proving ring reading	Load $P = (3) \times PRC$	Corrected Area $A_c = A_0 (1- \frac{\Delta L}{3})$	Shear Stress $\tau = \frac{(4)}{(5)}$ kg/cm^2
(1)	(2)	(3)	(4)	(5)	

Result:

Angle of internal friction, Φ (degree) =

Cohesion, c (kg/cm^2) =

Note: Angle of internal friction and Cohesion are obtained from graph.

EXPERIMENT NO. 15

Shear Strength Test

Object: To determine the unconfined compressive strength and shear parameters of the soil sample.

Apparatus: Compression machine, Sampling tube, Split mould, Proving ring, Dial gauge, Weighing balance, Sample extractor, Knife, Scale, Stop watch.

Theory: The unconfined compressive strength is defined as "the ratio of failure load to cross sectional area of the soil sample if it is not subjected to any lateral pressure". It is not possible to conduct the bearing capacity test in the field. Sometimes it is cheaper to take the undisturbed soil sample and test its strength in laboratory. Also to choose the best material for the embankment, one has to conduct strength tests on the samples selected. Under these conditions it is easy to perform the unconfined compression test on undisturbed and remoulded soil sample. Now we will investigate experimentally the strength of a given soil sample.

Sensitivity is defined as "the ratio of unconfined compressive strength of undisturbed soil sample to the unconfined compressive strength of remoulded sample at constant moisture content".

q_u (kg/cm^2)	**Soil consistency**
< 0.25	Very soft
0.25-0.5	Soft
0.5-1.0	Medium
1.0-2.0	Stiff
2.0-4.0	Very stiff
4.0 >	Hard

Applications:

This is the simplest and quickest test for determining cohesion and shear strength of the cohesive soils. These values are used for checking the short term stability of foundations and slopes. Sensitivity is a very useful factor to know the effect of remoulding on shear strength of cohesive soils.

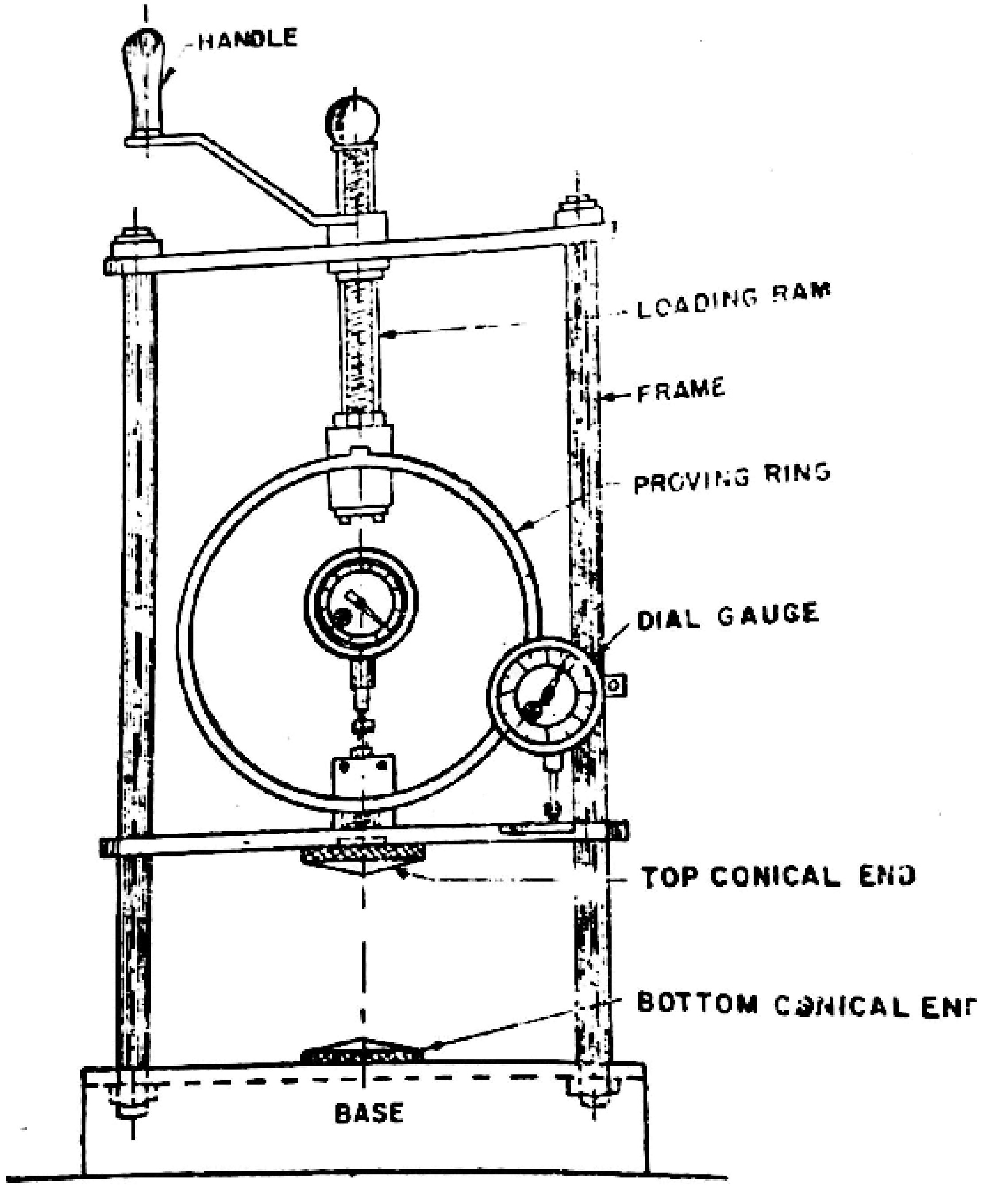

Fig 15.1 Unconfined Compression Test Apparatus

Procedure:

1. Undisturbed cylindrical specimen may be cut from the bigger undisturbed sample obtained from the field. Alternatively field undisturbed sample may be obtained directly in a thin sampling tube having same internal diameter.
2. Remoulded sample may be prepared by compacting soil at the desired water content and dry density in a compaction mould and then cut by sampling tube.
3. Alternatively remoulded specimen may be prepared directly in the slit mould.
4. For laboratory test purpose prepare the remoulded sample by conducting compaction test with a desired water content and push the cylindrical split mould into that soil to get the specimen.
5. Trim the two ends of the mould sample.
6. Weigh the soil sample and the mould.
7. Remove the sample from the mould by splitting it in two parts.
8. Measure the initial diameter and height of the specimen.
9. Place the specimen on the bottom plate of the compression machine.
10. Raise the bottom plate of the machine to make contact of the specimen with the upper plate.
11. Adjust the dial gauge and proving ring to read zero.
12. Start applying the load and record the readings of the proving ring and dial gauge for every 1mm compression.
13. Continue loading till failure is complete.
14. Load at failure divided by the corrected area gives unconfined compressive strength.
15. Draw the graph strain versus stress to obtain the shear parameters.

Observation:

Least count of dial gauge, LC (mm) =

Least count of proving ring, LC (mm) =

Proving ring constant, PRC (N/div) = $\frac{\text{Load}}{\text{Division}}$

Specific gravity, G =

[Given or Assume or Measure]

Tabular Column:

Sl No.	Determination No.	Undisturbed sample	Remoulded sample
1	Initial length of the specimen, L cm		
2	Initial diameter of the specimen, D cm		
3	Initial area of the specimen, $A = \frac{\pi \text{ x } D \text{ x } D}{4}$ cm^2		
4	Initial volume of the specimen, V= A x H cm^3		
5	Mass of the mould, M_1 g		
6	Mass of the specimen + mould, M_2 g		
7	Mass of the specimen, $M_s = (M_2 - M_1)$ g		
8	Density, $\gamma = \frac{(M2-M1)}{V}$ g/cm^3		
9	Container No.		
10	Mass of empty metal container with lid, M_3g		
11	Mass of container + Wet soil, M_4g		
12	Mass of container + Dry soil, M_5g		
13	Mass of water, $M_w = (M_4 - M_5)$g		
14	Mass of dry soil, $M_d = (M_5 - M_3)$g		
15	Water Content, $w = \frac{(M4-M5)}{(M5-M3)}$ x 100%		
16	Void ratio, $e = \frac{G\ (1+w)\gamma w}{\gamma} - 1$		
17	Degree of saturation, $S = \frac{G\ x\ w}{e}\ x\ 100\%$		

Dial gauge reading	Strain $\Delta L = (1) \times LC$	Proving ring reading	Load $P = (3) \times PRC$	$\mathcal{E} = \frac{\Delta L}{L}$	Corrected Area $A_c = \frac{A}{1-(5)}$	Compressive stress $q_u = \frac{(4)}{(6)}$ kg/cm^2
(1)	(2)	(3)	(4)	(5)	(6)	

Result:

Unconfined compressive strength, q_u (kg/cm^2) =

Cohesion, c (kg/cm^2) =

Angle of internal friction, Φ (degree) =

Note: Angle of internal friction and Cohesion are obtained from graph.

EXPERIMENT NO. 16

Shear Strength Test

Object: To determine the shear strength parameters of the given soil sample by triaxial shear test.

Apparatus: Triaxial test cell with base, Compression machine (speed 0.05 to 7.5 mm/min, capacity 50kN), Lateral pressure assembly (accuracy 0.5 N/cm^2 with a pressure gauge), Proving ring (for low strength soils: capacity 1kN sensitivity 2N; for high strength soils: capacity 10kN sensitivity 10N), Rubber membranes, Membranes stretches, Rubber 'O' rings, Split mould, De-aired water supply, Vacuum pump, Porous stones, Balance, Oven, Desiccator, Crucibles, Scale and vernier calipers, Dial gauge, Stop watch.

Theory: The strength parameters, namely the cohesion and angle of shearing resistance are determined both by laboratory and field tests. In the laboratory, unconfined compression test, direct shear test, vane shear test and triaxial compression test are used. In the field, plate load test, large direct shear test, large vane shear test and block shear test may be performed. Selection of a suitable method will depend upon the type of soil and field conditions. Triaxial tests are superior where confining stress is to be applied and the plane of shear failure is not predetermined. For determining c and Φ, Mohr's circles are drawn, and then strength envelope is obtained. Slope of this envelope will represent the angle of shearing resistance and intersection with ordinate will give the cohesion.

Applications:

In deep foundations, confining pressure play the significant role in changing the behaviour of soils. Similarly in high rise earth dams, the confining pressures are of very high magnitude. Triaxial test is the only test to simulate these confining pressures. For short term stability of foundations, dams and slopes, shear strength parameters for unconsolidated undrained or consolidated undrained conditions are used, while for long term stability shear parameters corresponding to consolidated drained conditions will give more reliable results. All such special conditions can be achieved in triaxial tests.

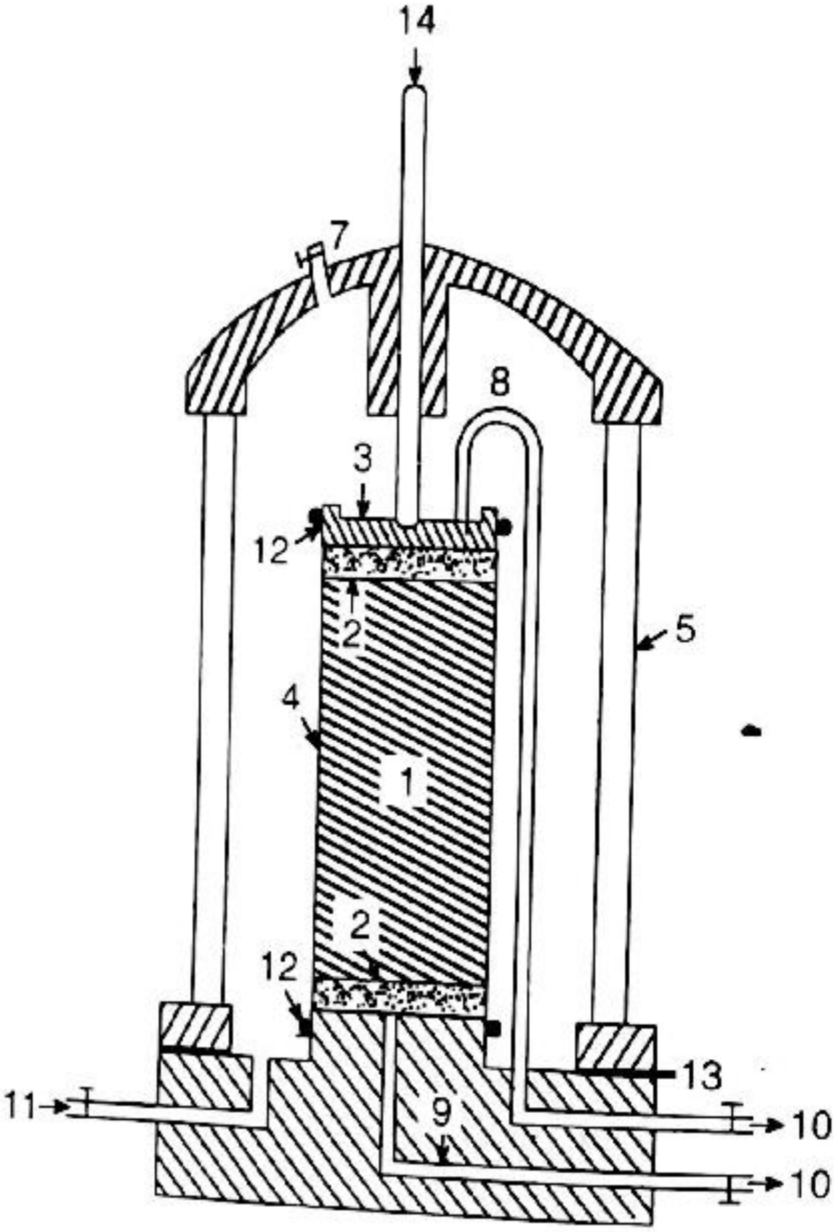

1. SOIL SPECIMEN
2. POROUS DISC
3. TOP CAP
4. RUBBER MEMBRANE
5. PERSPEX CYLINDER
6. LOADING RAM
7. AIR RELEASE VALVE
8. TOP DRAINAGE TUBE
9. BOTTOM DRAINAGE TUBE
10. CONNECTIONS FOR DRAINAGE OR PORE PRESSURE MEASUREMENT
11. CELL FLUID INLET
12. RUBBER RINGS
13. SEALING RING
14. AXIAL LOAD THROUGH PROVING RING

Fig 16.1 Triaxial Shear Test Apparatus

Procedure:

1. Remoulded specimens may be prepared by compacting the soil, at required water content and dry density, in a big size mould by static or dynamic method.
2. Push the split mould inside the compacted soil in order to obtain the required cylindrical specimen.
3. Measure the length, diameter and weight of the specimen.
4. Cover the specimen by rubber membrane.
5. Cover the pedestal in the triaxial cell with a solid cap or keep drainage value closed.
6. Place the specimen assembly centrally on the pedestal.
7. Admit the operating fluid in the cell, and raise its pressure to the desired value.
8. Adjust the loading machine to bring the loading ram a short distance away from the set on the top cap of the specimen.
9. Adjust the loading machine further so that the loading ram comes just in contact with the seat on the top of the specimen.
10. Note the initial reading of the dial measuring axial compression.
11. Apply the compressive force at constant rate of axial compression, such that failure is produced in a period of approximately 5 to 15 minutes.
12. Take the simultaneous reading of load and deformation dials, define the stress-strain curve.
13. Continue the test until the maximum value of stress has been passed.
14. Unload the specimen and drain off the cell fluid.
15. Dismantle the cell and take out the specimen.
16. Remove the rubber membrane and note the mode of failure. Weigh the specimen. Keep the sample for water content determination.
17. Repeat the test for three or more identical specimens under different cell pressures.
18. Draw the graph normal stress versus shear stress to obtain the shear parameters.

Observation:

Least count of dial gauge, LC (mm) =

Least count of proving ring, LC (mm) =

Proving ring constant, PRC (N/div) = $\frac{\text{Load}}{\text{Division}}$

Tabular Column:

Sl No.	Determination No.		Remoulded sample
1	Initial length of the specimen,	L cm	
2	Initial diameter of the specimen,	D cm	
3	Initial area of the specimen,	$A_0 = \frac{\pi \times D \times D}{4}$ cm^2	
4	Initial volume of the specimen,	V= A x H cm^3	
5	Cell pressure,	σ_3 kg/cm^2	

Cell pressure = 0.5 kg/cm^2

Dial gauge reading	Strain ΔL = (1) x LC	Proving ring reading	Load P = (3) x PRC	$\mathcal{E} = \frac{\Delta L}{L}$	Corrected Area $A_c = \frac{A}{1-(5)}$	Deviator stress $(\sigma_1-\sigma_3) = \frac{(4)}{(6)}$ kg/cm^2	Stress ratio $\frac{\sigma 1}{\sigma 3}$
(1)	(2)	(3)	(4)	(5)	(6)	(7)	

Cell pressure = 1.0 kg/cm^2

Dial gauge reading	Strain ΔL = (1) x LC	Proving ring reading	Load P = (3) x PRC	$\varepsilon = \frac{\Delta L}{L}$	Corrected Area $A_c = \frac{A}{1-(5)}$	Deviator stress $(\sigma_1-\sigma_3) = \frac{(4)}{(6)}$ kg/cm^2	Stress ratio $\frac{\sigma 1}{\sigma 3}$
(1)	(2)	(3)	(4)	(5)	(6)	(7)	

Cell pressure = 1.5 kg/cm^2

Dial gauge reading	Strain ΔL = (1) x LC	Proving ring reading	Load P = (3) x PRC	$\varepsilon = \frac{\Delta L}{L}$	Corrected Area $A_c = \frac{A}{1-(5)}$	Deviator stress $(\sigma_1-\sigma_3) = \frac{(4)}{(6)}$ kg/cm^2	Stress ratio $\frac{\sigma 1}{\sigma 3}$
(1)	(2)	(3)	(4)	(5)	(6)	(7)	

Result:

Cohesion, c (kg/cm^2) =

Angle of internal friction, Φ (degree) =

Note: Angle of internal friction and Cohesion are obtained from graph.

EXPERIMENT NO. 17

Shear Strength Test

Object: To determine the shear strength of the given soil sample by vane shear test.

Apparatus: Vane shear machine, Specimen, Specimen container, Callipers.

Theory: The vane shear test may also conducted in the laboratory. The laboratory shear vane will be usually smaller in size as compared to the field vane. If suitable undisturbed for remoulded samples cannot be got for conducting triaxial or unconfined compression tests, the shear strength is determined by a device called the shear vane.

Applications:

Vane shear test is useful method of measuring the shear strength of clay. It is a cheaper and quicker method. The test can also be conducted in the laboratory. The laboratory vane shear test for the measurement of shear strength of cohesive soils is useful for soils of low shear strength for which triaxial or unconfined tests cannot be performed. The test gives the undrained strength of the soil. The undisturbed and remoulded strength are useful for evaluating the sensitivity of soil.

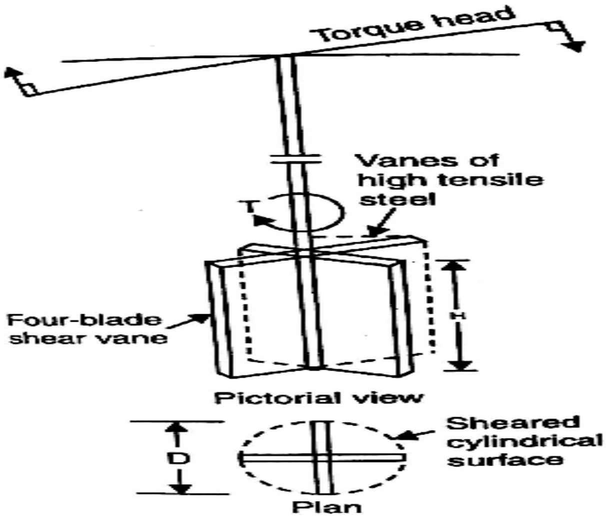

Laboratory vane:
$H = 20$ mm
$D = 12$ mm
$t = 0.5$ to 1 mm

Field vane:
$H = 10$ to 20 cm
$D = 5$ to 10 cm
$t = 2.5$ cm

Fig 17.1 Vane Shear Test Apparatus

Procedure:

1. Prepare two or three specimens of the soil sample of dimensions of at least 37.5mm diameter and 75mm length.
2. Mount the specimen container with the specimen on the base of the vane shear apparatus.
3. If the specimen container is closed at one end, it should be provided with a hole of about 1mm diameter at the bottom.
4. Gently lower the shear vanes into the specimen to their full length without disturbing the soil specimen. The top of the vanes should be at least 10mm below the top of the specimen.
5. Note the readings of the angle of twist.
6. Rotate the vanes at an uniform rate by suitable operating the torque application handle until the specimen fails.
7. Note the final reading of the angle of twist.
8. Find the value of blade height.
9. Find the value of blade width.

Tabular Column:

Initial reading (Deg)	Final reading (Deg)	Difference (Deg)	Spring Constant kg-cm	T = $\frac{(4)}{180\ x\ (3)}$ kg-cm	S = $\frac{(5)}{3.14\ (\frac{DxDxH}{2}+\frac{DxDxD}{6})}$ kg/cm^2	Average S kg/cm^2
(1)	(2)	(3)	(4)	(5)	(6)	

Calculations:

Shear strength of soil, S (kg/cm^2) = $\frac{T}{3.14\,(\frac{DxDxH}{2}+\frac{DxDxD}{6})}$

Result:

Shear strength, S (kg/cm^2) =

EXPERIMENT NO. 18

California Bearing Ratio Test

Object: To determine the California bearing ratio of the given soil sample.

Apparatus: Loading machine, Plunger of diameter of 50 mm, Cylindrical moulds, Compaction rammers, Annular weights, Adjustable stem, Perforated plate, Tripod, Dial gauge Annular weight.

Theory: The California Bearing Ratio (CBR) test was developed by the California Division of Highway as a method of classifying and evaluating soil-sub grade and base course materials for flexible pavements. The CBR is a measure of resistance of a material to penetration of standard plunger under controlled density and moisture conditions. The test procedure should be strictly adhered if high degree of reproducibility is desired. The CBR test may be conducted in re-moulded (or) undisturbed specimen in the laboratory. The test is simple and has been extensively investigated for field correlations of flexible pavement thickness requirement.

Penetration (mm)	Standard Load (Kg)	Unit standard load (Kg/cm^2)
2.5	1370	70
5.0	2055	105
7.5	2630	134
10.0	3180	162
12.5	3600	183

The California bearing ratio is defined as “the rate of the force per unit area required to penetrate a soil mass with a standard circular plunger of 50mm diameter at the rate of 1.25 mm/min to that required for the corresponding penetration of a standard material”.

Applications:

The strength of the subgrade is an important factor in the determination of the thickness required for a flexible pavement. It is expressed in terms of “California Bearing Ratio”. The results obtained by these tests are used in conjunction with empirical curves, based on experience, for the design of flexible pavements. The test is arbitrary and the results give an empirical number, expressed usually in percent, which may not be directly related to fundamental properties governing the shear strength of soils. However, attempts have been made recently to correlate CBR value with the bearing capacity and plasticity index of the soil.

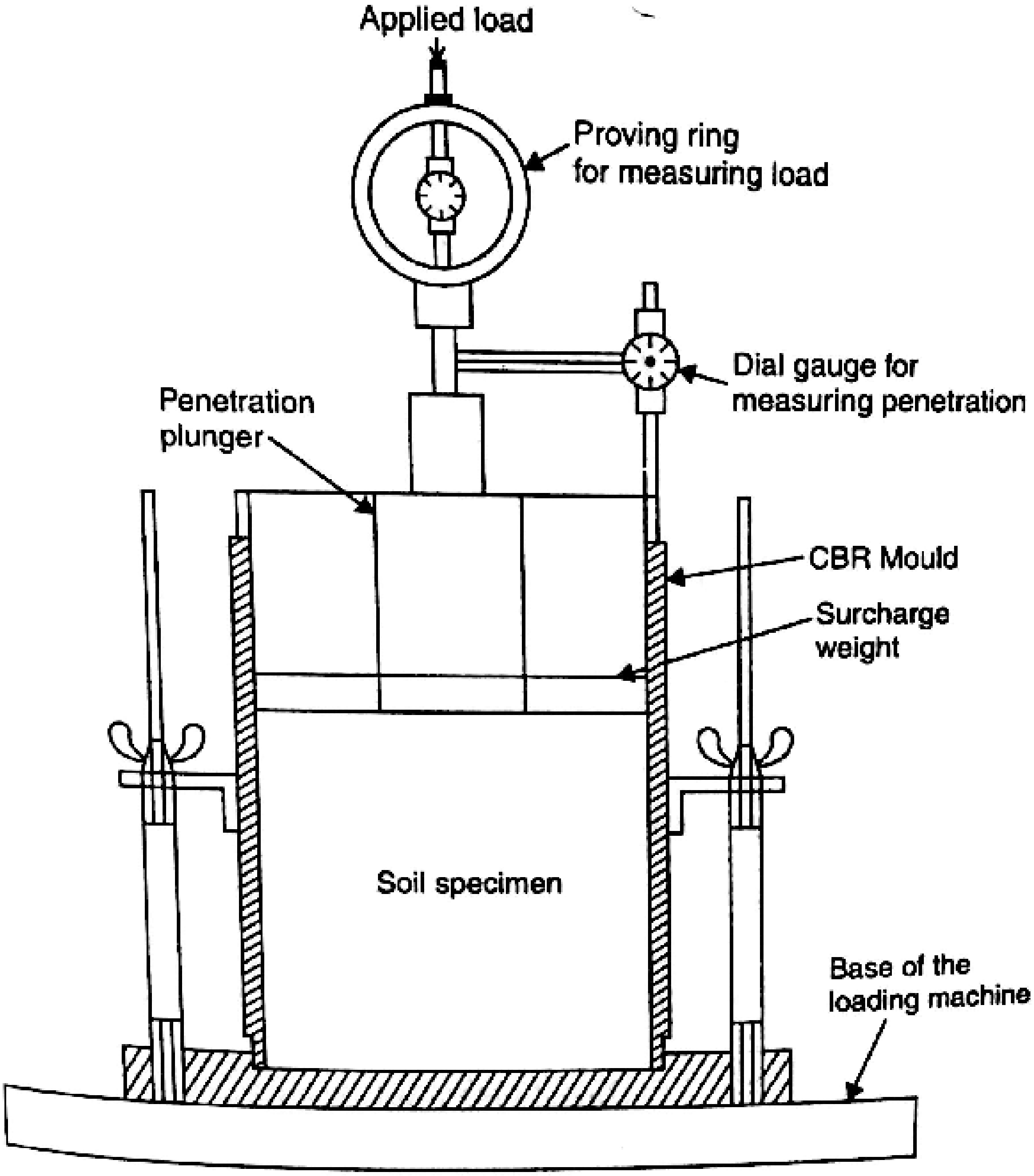

Fig 18.1 California Bearing Ratio Test Apparatus

Procedure:

1. The soil is sieved through 20 mm sieve and 5 kg of soil is weighed accurately.
2. Add water to it to bring the moisture content to about 4 % for coarse grained soil and 8 % for fine grained soils.
3. Clean the mould and fix it to the base.
4. The spacer disc is placed at the bottom of the mould over the base plate and a coarse filter paper is placed over the spacer disc.
5. For IS heavy compaction (or) the modified proctor compaction, the soil is divided into five equal parts; the soil is compacted in five equal layers, each of compacted by applying 56 evenly distributed blows of the rammer.
6. After compacting the last layer, the collar is removed and the excess soil above the top of the mould is evenly trimmed off by means of the straight edge.
7. The clamps are removed and the mould with the compacted soil is lifted leaving below the perforated base plate and the spacer disc which is removed.
8. The mould with the compacted soil is weighed.
9. A filter paper is placed on the perforated base plate, the mould with compacted soil is inverted and placed in position over the base plate (such that the top of the soil is now placed over the base plate) and the clamps of the base plate are tightened.
10. Another filter paper is placed on the top surface of the sample and the perforated plate with adjustable stem is placed over it.
11. Surcharge weights of 2.5 (or) 5.0 Kg weight are placed over the perforated plate and the whole mould with the weights is placed in a water tank for soaking.
12. Soaking of the soil specimen for four full days (or) 96 hours.
13. The mould is taken out of the water tank and the sample is allowed to drain in a vertical position for 15 minutes.
14. The mould with the specimen is clamped over the base plate and the same surcharge weights are placed on the specimen centrally such that the penetration test could be conducted.
15. The mould with the base plate is placed under the penetration plunger of the loading machine.
16. The penetration plunger is seated at the centre of the specimen and is brought in contact with top surface of the soil sample by applying a seating of 4 Kg.
17. Dial gauge for measuring the penetration values of the plunger is fitted in position.

18. The dial gauge of the proving ring and the penetration dial gauge are set to zero.
19. The load is applied to penetration plunger at a uniform rate of 2.15 mm/min.
20. The load readings are recorded at penetration reading of 0.0, 0.5, 1.0, 1.5, 2.0, 2.5, 3.0, 4.0, 5.0, 7.5, 10.0 and 12.5 mm.
21. The proving ring calibration factor is noted so that the load dial values can be converted into load in Kg.
22. Repeat the procedure for two more different samples.
23. Plot a graph of penetration (mm) on x-axis and load (Kg/cm^2) on y-axis in order to find the unit load carried by the soil sample.

Observation:

Compacting moisture content =

Condition of test specimen =

Proving ring constant, PRC (N/div) = $\frac{\text{Load}}{\text{Division}}$

Tabular column:

Penetration (mm)	Proving ring reading	Dial gauge reading	Load on plunger (Kg)	Corrected load (Kg)	Unit load (Kg/cm^2)
(1)	(2)	(3)	(4)	(5) x PRC	(6)/ 19.635
0.0					
0.5					
1.0					
1.5					
2.0					
2.5					
3.0					
4.0					
5.0					
7.5					
10.0					

12.5					

Calculations:

California Bearing Ratio, (%) = {unit load carried by soil sample at defined penetration level/unit load carried by standard crushed stones at above penetration level} * 100.

Result:

California Bearing Ratio Value of given soil sample (%) =

Note: The load values noted for each penetration level are divided by the area of the loading plunger **(19.635 cm2)** to obtain the **pressure (or) unit load** values on the loading plunger. The unit load values corresponding 2.5 and 5.0 mm penetration values are found from the graph.

Note: California Bearing Ratio is found only for 2.5 and 5.0 mm penetration values.

Indian Standard Codes:

IS 2720 [Part I and II] 1980-1992	Specific Gravity Method
IS 2720 [Part II] 1973	Water Content Method
IS 2720 [Part IV] 1975	Grain Size Analysis
IS 2720 [Part XXIX] 1966	Core Cutter Method
IS 2720 [Part XXVII] 1966	Sand Replacement Method
IS 2720 [Part V] 1970	Liquid and Plastic Limit Method
IS 2720 [Part VI] 1972	Shrinkage Limit Method
IS 2720 [Part VII] 1974	Light Compaction Method
IS 2720 [Part VIII] 1965	Heavy Compaction Method
IS 2720 [Part XVII] 1966	Permeability Method
IS 2720 [Part XIII] 1986	Direct Shear Method
IS 2720 [Part X] 1991	Unconfined Compression Method
IS 2720 [Part XI] 1933	Triaxial Shear Method
IS 4434 1978	Vane Shear Method

Viva Questions:

1. Define water content.
2. Differentiate between moisture content and natural water content.
3. What is difference between the air dried and oven dried soil sample?
4. What are the practical application of moisture content in the field problems?
5. Mention the different methods used for water content determination.
6. What is the purpose of sieve analysis?
7. Define coefficient of uniformity.
8. Define coefficient of curvature.
9. Define sorting coefficient.
10. Define effective size.
11. What are the application of results of sieve analysis in field problems?
12. Define the terms liquid, plastic and shrinkage limit.
13. What is the method used in the determination of liquid and shrinkage limit test?
14. Define the terms apparent specific gravity, bulk specific gravity and specific gravity of water.
15. Define the terms voids ratio, degree of saturation, porosity, bulk density, submerged density, saturated density, relative density, percent air void and unit weight of soil.
16. Mention the IS classification of soils.
17. Define plasticity chart of IS classification of soil and permeability of soil.
18. Give the formula for I_A according for plasticity chart of soil.
19. Define compaction, consolidation, sensitivity and compressive strength of soil.
20. Differentiate between compaction and consolidation.
21. Define california bearing ratio.
22. Distinguish between undisturbed, disturbed and remoulded soil sample.
23. Define stokes law. Mention the assumptions made in that law.
24. What are the corrections to be applied for hydrometer readings?
25. Define the terms under consolidated, normally consolidated and over consolidated soils.
26. Mentions the factors affecting the compaction of soil.
27. Different methods carried for field density determination.
28. Define deviator stress.
29. What are the methods to increase the shear strengths of soils?

30. What are the other laboratory and fields methods to determine the shear strength of soils?
31. What are the other methods of compactions?
32. What are the applications of shear strength parameters in the field problem?
33. Draw the three phase diagram of the soil.
34. Define coefficient of compressibility and coefficient of volume change.
35. What are the factors affecting coefficient of consolidation?
36. Mention the different methods of determination of coefficient of consolidation.
37. What is preconsolidation pressure?
38. Define primary and secondary consolidation of soil.
39. What are limitations of direct shear test?
40. What are the factors affecting permeability of soil?